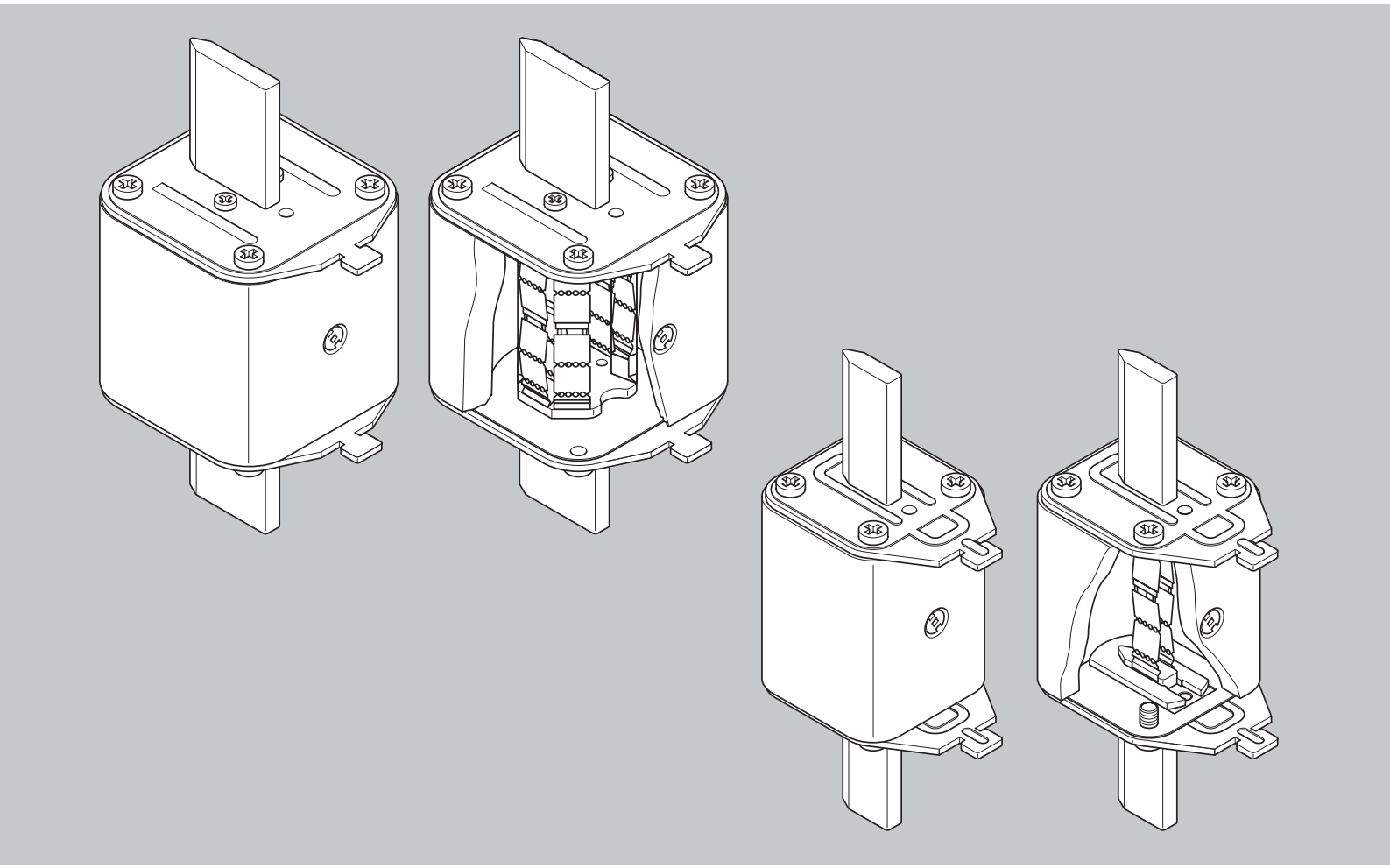

Always the right Fuse-Link

NH Fuse-Link 400 V with twin indicator

NH Fuse-Links for special industrial applications, e.g. mining industry

gTr Fuse-Links for transformer protection

NH Fuse-Links up to 1500 V AC

Content

NH Fuse-Links
AC 400 V gG **20**

NH Fuse-Links
AC 500 V gG **23**

NH Fuse-Links
AC 500 V gL **26**

NH Fuse-Links
AC 690 V gG **31**

NH Fuse-Links
AC 400 V gTr **33**

NH Fuse-Links
AC 500 V gR **34**

NH Fuse-Links
AC 1000 V gB/aM **37**

NH Fuse-Links
AC 1000/1500 V TF **38**

Technical Data **see page 40**

System

Developed out of its traditional competence, EFEN offers a complete system of NH Fuse-Links according to the newest state of technology. Today, EFEN NH Fuse-Links belong to the leading products on the market. A high technical standard continuously ensures an excellent quality. Particularly remarkable for the EFEN-assortment is the diversity of its special applications.

Features

EFEN NH Fuse-Links comply with national and international standards such as DIN, VDE and IEC.
The Fuse-Links are available with death metal and live metal gripping lugs. A wide assortment of accessories completes this product-range.

gR NH Fuse-Links for the protection of semiconductors

Special Fuse-Links for DC applications (see page 314 ff.)

NH Fuse-Links 400 V gG

Rated voltage: AC 400 V
Utilization category: gG acc. IEC 60269-2 + IEC 60269-1
VDE 0636-2 + VDE 0636-1 Breaking capacity 100 kA

35404.1600

NH Fuse-Links for cable and line protection, AC 400 V gG

Properties:
- Twin indicator
- Live metal gripping lugs
- Fuse element copper

Description	Size	Amps	Order-No.	PU	PG	Sur. Ag	Sur. Cu	Price €/pc.
NH-SI 000 2A GG AC400V AK	000	2	**35401.0020**	3	N 5	0,001	0,003	3,80
NH-SI 000 4A GG AC400V AK	000	4	**35401.0040**	3	N 5	0,001	0,003	3,80
NH-SI 000 6A GG AC400V AK	000	6	**35401.0060**	3	N 5	0,001	0,003	3,10
NH-SI 000 10A GG AC400V AK	000	10	**35401.0100**	3	N 5	0,001	0,003	3,10
NH-SI 000 16A GG AC400V AK	000	16	**35401.0160**	9	N 5	0,001	0,003	3,10
NH-SI 000 20A GG AC400V AK	000	20	**35401.0200**	9	N 5	0,001	0,003	3,10
NH-SI 000 25A GG AC400V AK	000	25	**35401.0250**	9	N 5	0,001	0,003	3,10
NH-SI 000 32A GG AC400V AK	000	32	**35401.0320**	9	N 5	0,001	0,003	3,10
NH-SI 000 35A GG AC400V AK	000	35	**35401.0350**	9	N 5	0,001	0,003	3,10
NH-SI 000 40A GG AC400V AK	000	40	**35401.0400**	9	N 5	0,001	0,003	3,10
NH-SI 000 50A GG AC400V AK	000	50	**35401.0500**	9	N 5	0,001	0,003	3,10
NH-SI 000 63A GG AC400V AK	000	63	**35401.0630**	9	N 5	0,001	0,003	3,10
NH-SI 000 80A GG AC400V AK	000	80	**35401.0800**	9	N 5	0,001	0,003	3,10
NH-SI 000 100A GG AC400V AK	000	100	**35401.1000**	9	N 5	0,001	0,003	3,10
NH-SI 00 63A GG AC400V AK	00	63	**35402.0630**	3	N 5	0,002	0,004	3,30
NH-SI 00 80A GG AC400V AK	00	80	**35402.0800**	3	N 5	0,002	0,004	3,30
NH-SI 00 100A GG AC400V AK	00	100	**35402.1000**	3	N 5	0,002	0,004	3,30
NH-SI 00 125A GG AC400V AK	00	125	**35402.1250**	3	N 5	0,002	0,004	3,50
NH-SI 00 160A GG AC400V AK	00	160	**35402.1600**	3	N 5	0,002	0,007	3,60
NH-SI 1/16A GG AC400V AK	1	16	**35403.0160**	3	N 5	0,003	0,008	7,30
NH-SI 1/20A GG AC400V AK	1	20	**35403.0200**	3	N 5	0,003	0,009	7,30
NH-SI 1/25A GG AC400V AK	1	25	**35403.0250**	3	N 5	0,003	0,010	7,30
NH-SI 1/32A GG AC400V AK	1	32	**35403.0320**	3	N 5	0,003	0,010	7,30
NH-SI 1/35A GG AC400V AK	1	35	**35403.0350**	3	N 5	0,003	0,010	7,30
NH-SI 1/40A GG AC400V AK	1	40	**35403.0400**	3	N 5	0,003	0,010	7,30
NH-SI 1/50A GG AC400V AK	1	50	**35403.0500**	3	N 5	0,003	0,010	7,30
NH-SI 1/63A GG AC400V AK	1	63	**35403.0630**	3	N 5	0,003	0,010	7,30
NH-SI 1/80A GG AC400V AK	1	80	**35403.0800**	3	N 5	0,003	0,010	7,30
NH-SI 1/100A GG AC400V AK	1	100	**35403.1000**	3	N 5	0,003	0,010	7,30
NH-SI 1 125A GG AC400V AK	1	125	**35403.1250**	3	N 5	0,003	0,010	7,30
NH-SI 1 160A GG AC400V AK	1	160	**35403.1600**	3	N 5	0,003	0,010	7,30
NH-SI 1 200A GG AC400V AK	1	200	**35403.2000**	3	N 5	0,003	0,010	9,30
NH-SI 1 224A GG AC400V AK	1	224	**35403.2240**	3	N 5	0,003	0,010	9,30
NH-SI 1 250A GG AC400V AK	1	250	**35403.2500**	3	N 5	0,003	0,010	9,30
NH-SI 2/35A GG AC400V AK	2	35	**35404.0350**	3	N 5	0,004	0,019	10,40
NH-SI 2/50A GG AC400V AK	2	50	**35404.0500**	3	N 5	0,004	0,019	10,40
NH-SI 2/63A GG AC400V AK	2	63	**35404.0630**	3	N 5	0,004	0,019	10,40
NH-SI 2/80A GG AC400V AK	2	80	**35404.0800**	3	N 5	0,004	0,019	10,40
NH-SI 2/100A GG AC400V AK	2	100	**35404.1000**	3	N 5	0,004	0,019	10,40
NH-SI 2/125A GG AC400V AK	2	125	**35404.1250**	3	N 5	0,004	0,019	10,40
NH-SI 2/160A GG AC400V AK	2	160	**35404.1600**	3	N 5	0,004	0,019	10,40
NH-SI 2/200A GG AC400V AK	2	200	**35404.2000**	3	N 5	0,004	0,019	12,40
NH-SI 2/224A GG AC400V AK	2	224	**35404.2240**	3	N 5	0,004	0,019	12,40
NH-SI 2/250A GG AC400V AK	2	250	**35404.2500**	3	N 5	0,004	0,019	12,40
NH-SI 2 300A GG AC400V AK	2	300	**35404.3000**	3	N 5	0,004	0,019	12,40
NH-SI 2 315A GG AC400V AK	2	315	**35404.3150**	3	N 5	0,004	0,019	12,40
NH-SI 2 355A GG AC400V AK	2	355	**35404.3550**	3	N 5	0,004	0,019	13,50
NH-SI 2 400A GG AC400V AK	2	400	**35404.4000**	3	N 5	0,004	0,019	13,50
NH-SI 3/250A GG AC400V AK	3	250	**35405.2500**	1	N 5	0,007	0,024	18,60
NH-SI 3/300A GG AC400V AK	3	300	**35405.3000**	1	N 5	0,007	0,026	18,60
NH-SI 3/315A GG AC400V AK	3	315	**35405.3150**	1	N 5	0,007	0,026	18,60
NH-SI 3/400A GG AC400V AK	3	400	**35405.4000**	1	N 5	0,007	0,026	18,60
NH-SI 3/425A GG AC400V AK	3	425	**35405.4250**	1	N 5	0,007	0,026	18,60
NH-SI 3 500A GG AC400V AK	3	500	**35405.5000**	1	N 5	0,007	0,026	20,70
NH-SI 3 630A GG AC400V AK	3	630	**35405.6300**	1	N 5	0,007	0,026	35,00

NH Fuse-Links 400 V gG

Rated voltage: AC 400 V
Utilization category: gG acc.
VDE 0636-2 + VDE 0636-1
IEC 60269-2 + IEC 60269-1
Breaking capacity 100 kA

35407.1600

NH Fuse-Links for cable and line protection, AC 400 V gG

Properties:
- Twin indicator
- Dead metal gripping lugs
- Fuse element copper

Description	Size	Amps	Order-No.	PU	PG	Sur. Ag	Sur. Cu	Price €/pc.
NH-SI 000 2A GG AC400V LI AK	000	2	**35406.0020**	3	N 5	0,001	0,003	3,90
NH-SI 000 4A GG AC400V LI AK	000	4	**35406.0040**	3	N 5	0,001	0,003	3,90
NH-SI 000 6A GG AC400V LI AK	000	6	**35406.0060**	3	N 5	0,001	0,003	3,90
NH-SI 000 10A GG AC400V LI AK	000	10	**35406.0100**	3	N 5	0,001	0,003	3,90
NH-SI 000 16A GG AC400V LI AK	000	16	**35406.0160**	9	N 5	0,001	0,003	3,90
NH-SI 000 20A GG AC400V LI AK	000	20	**35406.0200**	9	N 5	0,001	0,003	3,90
NH-SI 000 25A GG AC400V LI AK	000	25	**35406.0250**	9	N 5	0,001	0,003	3,90
NH-SI 000 32A GG AC400V LI AK	000	32	**35406.0320**	9	N 5	0,001	0,003	3,90
NH-SI 000 35A GG AC400V LI AK	000	35	**35406.0350**	9	N 5	0,001	0,003	3,90
NH-SI 000 40A GG AC400V LI AK	000	40	**35406.0400**	9	N 5	0,001	0,003	3,90
NH-SI 000 50A GG AC400V LI AK	000	50	**35406.0500**	9	N 5	0,001	0,003	3,90
NH-SI 000 63A GG AC400V LI AK	000	63	**35406.0630**	9	N 5	0,001	0,003	3,90
NH-SI 000 80A GG AC400V LI AK	000	80	**35406.0800**	9	N 5	0,001	0,003	3,90
NH-SI 000 100A GG AC400V LI AK	000	100	**35406.1000**	9	N 5	0,001	0,003	3,90
NH-SI 00 63A GG AC400V LI AK	00	63	**35407.0630**	3	N 5	0,002	0,004	4,10
NH-SI 00 80A GG AC400V LI AK	00	80	**35407.0800**	3	N 5	0,002	0,004	4,10
NH-SI 00 100A GG AC400V LI AK	00	100	**35407.1000**	3	N 5	0,002	0,004	4,10
NH-SI 00 125A GG AC400V LI AK	00	125	**35407.1250**	3	N 5	0,002	0,004	4,10
NH-SI 00 160A GG AC400V LI AK	00	160	**35407.1600**	3	N 5	0,002	0,007	4,10
NH-SI 1/ 16A GG AC400V LI AK	1	16	**35408.0160**	3	N 5	0,003	0,008	10,50
NH-SI 1/ 20A GG AC400V LI AK	1	20	**35408.0200**	3	N 5	0,003	0,009	10,50
NH-SI 1/ 25A GG AC400V LI AK	1	25	**35408.0250**	3	N 5	0,003	0,010	10,50
NH-SI 1/ 32A GG AC400V LI AK	1	32	**35408.0320**	3	N 5	0,003	0,010	10,50
NH-SI 1/ 35A GG AC400V LI AK	1	35	**35408.0350**	3	N 5	0,003	0,010	10,50
NH-SI 1/ 40A GG AC400V LI AK	1	40	**35408.0400**	3	N 5	0,003	0,010	10,50
NH-SI 1/ 50A GG AC400V LI AK	1	50	**35408.0500**	3	N 5	0,003	0,010	10,50
NH-SI 1/ 63A GG AC400V LI AK	1	63	**35408.0630**	3	N 5	0,003	0,010	10,50
NH-SI 1/ 80A GG AC400V LI AK	1	80	**35408.0800**	3	N 5	0,003	0,010	10,50
NH-SI 1/ 100A GG AC400V LI AK	1	100	**35408.1000**	3	N 5	0,003	0,010	10,50
NH-SI 1 125A GG AC400V LI AK	1	125	**35408.1250**	3	N 5	0,003	0,010	10,50
NH-SI 1 160A GG AC400V LI AK	1	160	**35408.1600**	3	N 5	0,003	0,010	10,90
NH-SI 1 200A GG AC400V LI AK	1	200	**35408.2000**	3	N 5	0,003	0,010	11,40
NH-SI 1 224A GG AC400V LI AK	1	224	**35408.2240**	3	N 5	0,003	0,010	11,40
NH-SI 1 250A GG AC400V LI AK	1	250	**35408.2500**	3	N 5	0,003	0,010	11,40

NH Fuse-Links 400 V gG

Rated voltage: AC 400 V
Utilization category: gG acc.
VDE 0636-2 + VDE 0636-1
IEC 60269-2 + IEC 60269-1
Breaking capacity 100 kA

35407.1600

NH Fuse-Links for cable and line protection, AC 400 V gG

Properties:
- Twin indicator
- Dead metal gripping lugs
- Fuse element copper

Description	Size	Amps	Order-No.	PU	PG	Sur. Ag	Sur. Cu	Price €/pc.
NH-SI 2/ 35A GG AC400V LI AK	2	35	**35409.0350**	3	N 5	0,004	0,019	13,50
NH-SI 2/ 50A GG AC400V LI AK	2	50	**35409.0500**	3	N 5	0,004	0,019	13,50
NH-SI 2/ 63A GG AC400V LI AK	2	63	**35409.0630**	3	N 5	0,004	0,019	13,50
NH-SI 2/ 80A GG AC400V LI AK	2	80	**35409.0800**	3	N 5	0,004	0,019	13,50
NH-SI 2/ 100A GG AC400V LI AK	2	100	**35409.1000**	3	N 5	0,004	0,019	13,50
NH-SI 2/ 125A GG AC400V LI AK	2	125	**35409.1250**	3	N 5	0,004	0,019	13,50
NH-SI 2/ 160A GG AC400V LI AK	2	160	**35409.1600**	3	N 5	0,004	0,019	13,50
NH-SI 2/ 200A GG AC400V LI AK	2	200	**35409.2000**	3	N 5	0,004	0,019	13,50
NH-SI 2/ 224A GG AC400V LI AK	2	224	**35409.2240**	3	N 5	0,004	0,019	13,50
NH-SI 2/ 250A GG AC400V LI AK	2	250	**35409.2500**	3	N 5	0,004	0,019	13,50
NH-SI 2 300A GG AC400V LI AK	2	300	**35409.3000**	3	N 5	0,004	0,019	13,50
NH-SI 2 315A GG AC400V LI AK	2	315	**35409.3150**	3	N 5	0,004	0,019	15,50
NH-SI 2 355A GG AC400V LI AK	2	355	**35409.3550**	3	N 5	0,004	0,019	15,50
NH-SI 2 400A GG AC400V LI AK	2	400	**35409.4000**	3	N 5	0,004	0,019	15,50
NH-SI 3/ 250A GG AC400V LI AK	3	250	**35410.2500**	1	N 5	0,007	0,026	19,60
NH-SI 3/ 300A GG AC400V LI AK	3	300	**35410.3000**	1	N 5	0,007	0,026	19,60
NH-SI 3/ 315A GG AC400V LI AK	3	315	**35410.3150**	1	N 5	0,007	0,026	19,60
NH-SI 3/ 400A GG AC400V LI AK	3	400	**35410.4000**	1	N 5	0,007	0,026	19,60
NH-SI 3/ 425A GG AC400V LI AK	3	425	**35410.4250**	1	N 5	0,007	0,026	19,60
NH-SI 3 500A GG AC400V LI AK	3	500	**35410.5000**	1	N 5	0,007	0,026	20,60
NH-SI 3 630A GG AC400V LI AK	3	630	**35410.6300**	1	N 5	0,007	0,026	20,60

NH Fuse-Links 500 V gG

- Rated voltage:
  AC 500 V/DC 440 V*
- Utilization category:
  gG acc. VDE 0636-2 +
  VDE 0636-1
- IEC 60269-2
- Breaking capacity:
  120 kA (AC 500 V)/25 kA
  (DC 440 V)

* Size 000-00 DC 220 V

For more information
see page **40**

35011.1090

NH Fuse-Links for cable and line protection, AC 500 V gG

Properties:
- Middle indicator
- Live metal gripping lugs
- Fuse element copper
- Size 000 with front indicator

Description	Size	Amps	Order-No.	PU	PG	Sur. Ag	Sur. Cu	Price €/pc.
NH-SI 000 2A GG AC500V AS	000	2	**35000.0020**	10	N 5	0,001	0,003	3,80
NH-SI 000 4,0A GG AC500V AS	000	4	**35000.0040**	10	N 5	0,001	0,003	3,80
NH-SI 000 6A GG AC500V AS	000	6	**35000.0060**	10	N 5	0,001	0,003	3,10
NH-SI 000 10A GG AC500V AS	000	10	**35000.0100**	10	N 5	0,001	0,003	3,10
NH-SI 000 16A GG AC500V AS	000	16	**35000.0160**	10	N 5	0,001	0,003	3,10
NH-SI 000 20A GG AC500V AS	000	20	**35000.0200**	10	N 5	0,001	0,003	3,10
NH-SI 000 25A GG AC500V AS	000	25	**35000.0250**	10	N 5	0,001	0,003	3,10
NH-SI 000 32A GG AC500V AS	000	32	**35000.0320**	10	N 5	0,001	0,003	3,10
NH-SI 000 35A GG AC500V AS	000	35	**35000.0350**	10	N 5	0,001	0,003	3,10
NH-SI 000 40A GG AC500V AS	000	40	**35000.0400**	10	N 5	0,001	0,003	3,10
NH-SI 000 50A GG AC500V AS	000	50	**35000.0500**	10	N 5	0,001	0,003	3,10
NH-SI 000 63A GG AC500V AS	000	63	**35000.0630**	10	N 5	0,001	0,003	3,10
NH-SI 000 80A GG AC500V AS	000	80	**35000.0800**	10	N 5	0,001	0,003	3,10
NH-SI 000 100A GG AC500V AS	000	100	**35000.1000**	10	N 5	0,001	0,003	3,10
NH-SI 00 2A GG AC500V	00	2	**35011.0010**	3	N 5	0,002	0,004	3,40
NH-SI 00 4,0A GG AC500V	00	4	**35011.0020**	3	N 5	0,002	0,004	3,40
NH-SI 00 6A GG AC500V	00	6	**35011.0030**	3	N 5	0,002	0,004	3,40
NH-SI 00 10A GG AC500V	00	10	**35011.0040**	3	N 5	0,002	0,004	3,40
NH-SI 00 16A GG AC500V	00	16	**35011.0050**	3	N 5	0,002	0,004	3,40
NH-SI 00 20A GG AC500V	00	20	**35011.0060**	3	N 5	0,002	0,004	3,40
NH-SI 00 25A GG AC500V	00	25	**35011.0070**	3	N 5	0,002	0,004	3,30
NH-SI 00 32A GG AC500V	00	32	**35011.0080**	3	N 5	0,002	0,004	3,30
NH-SI 00 35A GG AC500V	00	35	**35011.0090**	3	N 5	0,002	0,004	3,30
NH-SI 00 40A GG AC500V	00	40	**35011.0100**	3	N 5	0,002	0,004	3,30
NH-SI 00 50A GG AC500V	00	50	**35011.0110**	3	N 5	0,002	0,004	3,30
NH-SI 00 63A GG AC500V	00	63	**35011.0120**	3	N 5	0,002	0,004	3,30
NH-SI 00 80A GG AC500V	00	80	**35011.0130**	3	N 5	0,002	0,004	3,30
NH-SI 00 100A GG AC500V	00	100	**35011.0140**	3	N 5	0,002	0,004	3,30
NH-SI 00 125A GG AC500V	00	125	**35011.0150**	3	N 5	0,002	0,004	3,50
NH-SI 00 160A GG AC500V	00	160	**35011.1090**	3	N 5	0,002	0,007	3,60
NH-SI 1/25A GG AC500V	1	25	**35035.0050**	3	N 6	0,003	0,010	7,30
NH-SI 1/35A GG AC500V	1	35	**35035.0060**	3	N 6	0,003	0,010	7,30
NH-SI 1/50A GG AC500V	1	50	**35035.0070**	3	N 6	0,003	0,010	7,30
NH-SI 1/63A GG AC500V	1	63	**35035.0080**	3	N 6	0,003	0,010	7,30
NH-SI 1/80A GG AC500V	1	80	**35035.0090**	3	N 6	0,003	0,010	7,30
NH-SI 1/100A GG AC500V	1	100	**35035.0100**	3	N 6	0,003	0,010	7,30
NH-SI 1/125A GG AC500V	1	125	**35035.0110**	3	N 6	0,003	0,010	7,30
NH-SI 1/160A GG AC500V	1	160	**35035.0120**	3	N 6	0,003	0,010	7,30
NH-SI 1 200A GG AC500V	1	200	**35035.0130**	3	N 6	0,003	0,010	9,30
NH-SI 1 224A GG AC500V	1	224	**35035.0140**	3	N 6	0,003	0,010	9,30
NH-SI 1 250A GG AC500V	1	250	**35035.0150**	3	N 6	0,003	0,010	9,30
NH-SI 1/32A GG AC500V	1	32	**35035.1220**	3	N 6	0,003	0,010	9,30
NH-SI 1/40A GG AC500V	1	40	**35035.1230**	3	N 6	0,003	0,010	9,30

NH Fuse-Links 500 V gG

- Rated voltage:
  AC 500 V/DC 440 V*
- Utilization category:
  gG acc. VDE 0636-2 +
  VDE 0636-1
- IEC 60269-2
- Breaking capacity:
  120 kA (AC 500 V)/25 kA
  (DC 440 V)

* Size 000-00 DC 220 V

For more information
see page **40**

35054.0080

NH Fuse-Links for cable and line protection, AC 500 V gG

Properties:
- Middle indicator
- Live metal gripping lugs
- Fuse element copper

Description	Size	Amps	Order-No.	PU	PG	Sur. Ag	Sur. Cu	Price €/pc.
NH-SI 2/125A GG AC500V	2	125	**35054.0070**	3	N 6	0,004	0,019	10,40
NH-SI 2/160A GG AC500V	2	160	**35054.0080**	3	N 6	0,004	0,019	10,40
NH-SI 2/200A GG AC500V	2	200	**35054.0090**	3	N 6	0,004	0,019	12,40
NH-SI 2/224A GG AC500V	2	224	**35054.0100**	3	N 6	0,004	0,019	12,40
NH-SI 2/250A GG AC500V	2	250	**35054.0110**	3	N 6	0,004	0,019	12,40
NH-SI 2 300A GG AC500V	2	300	**35054.0120**	3	N 6	0,004	0,019	12,40
NH-SI 2 315A GG AC500V	2	315	**35054.0130**	3	N 6	0,004	0,019	12,40
NH-SI 2 355A GG AC500V	2	355	**35054.0140**	3	N 6	0,004	0,019	12,40
NH-SI 2 400A GG AC500V	2	400	**35054.0150**	3	N 6	0,004	0,019	12,40
NH-SI 3/315A GG AC500V	3	315	**35078.0010**	3	N 6	0,007	0,026	18,60
NH-SI 3/355A GG AC500V	3	355	**35078.0020**	3	N 6	0,007	0,026	18,60
NH-SI 3/400A GG AC500V	3	400	**35078.0030**	3	N 6	0,007	0,026	18,60
NH-SI 3 500A GG AC500V	3	500	**35078.0050**	3	N 6	0,007	0,026	20,70
NH-SI 3 630A GG AC500V	3	630	**35078.0060**	3	N 6	0,007	0,026	35,00
NH-SI 3/300A GG AC500V	3	300	**35078.0190**	3	N 6	0,007	0,026	24,80
NH-SI 3/63A GG AC500V	3	63	**35078.0340**	3	N 6	0,007	0,026	18,60
NH-SI 3/80A GG AC500V	3	80	**35078.0350**	3	N 6	0,007	0,026	18,60
NH-SI 3/100A GG AC500V	3	100	**35078.0360**	3	N 6	0,007	0,026	18,60
NH-SI 3/125A GG AC500V	3	125	**35078.0370**	3	N 6	0,007	0,026	18,60
NH-SI 3/160A GG AC500V	3	160	**35078.0380**	3	N 6	0,007	0,026	18,60
NH-SI 3/200A GG AC500V	3	200	**35078.0390**	3	N 6	0,007	0,026	18,60
NH-SI 3/224A GG AC500V	3	224	**35078.0400**	3	N 6	0,007	0,026	18,60
NH-SI 3/250A GG AC500V	3	250	**35078.0410**	3	N 6	0,007	0,026	18,60
NH-SI 4A 400A GG AC500V	4a	400	**35097.0120**	3	N 7	0,020	0,080	128,30
NH-SI 4A 500A GG AC500V	4a	500	**35097.0010**	3	N 7	0,020	0,080	128,30
NH-SI 4A 630A GG AC500V	4a	630	**35097.0020**	3	N 7	0,020	0,080	128,30
NH-SI 4A 800A GG AC500V	4a	800	**35097.0030**	1	N 7	0,020	0,080	128,30
NH-SI 4A 1000A GG AC500V	4a	1000	**35097.0040**	1	N 7	0,020	0,080	140,80
NH-SI 4A 1250A GG AC500V	4a	1250	**35097.0050**	1	N 7	0,020	0,080	155,30
NH-SI 4A 1600A GG AC500V	4a	1600	**35097.0110**	1	N 7	0,020	0,080	177,00

NH Fuse-Links 500 V gG

- Rated voltage:
  AC 500 V/DC 440 V*
- Utilization category:
  gG acc. VDE 0636-2 +
  VDE 0636-1
- IEC 60269-2
- Breaking capacity:
  120 kA (AC 500 V)/25 kA
  (DC 440 V)

* Size 00 DC 220 V

For more information
see page **40**

35165.0160

NH Fuse-Links for cable and line protection, AC 500 V gG

Properties:
- Middle indicator
- Dead metal gripping lugs
- Fuse element copper

Description	Size	Amps	Order-No.	PU	PG	Sur. Ag	Sur. Cu	Price €/pc.
NH-SI 00 2A GG AC500V LI	00	2	**35165.0010**	3	N 5	0,002	0,004	4,10
NH-SI 00 4,0A GG AC500V LI	00	4	**35165.0020**	3	N 5	0,002	0,004	4,10
NH-SI 00 6A GG AC500V LI	00	6	**35165.0030**	3	N 5	0,002	0,004	4,10
NH-SI 00 10A GG AC500V LI	00	10	**35165.0040**	3	N 5	0,002	0,004	4,10
NH-SI 00 16A GG AC500V LI	00	16	**35165.0050**	3	N 5	0,002	0,004	4,10
NH-SI 00 20A GG AC500V LI	00	20	**35165.0060**	3	N 5	0,002	0,004	4,10
NH-SI 00 25A GG AC500V LI	00	25	**35165.0070**	3	N 5	0,002	0,004	4,10
NH-SI 00 32A GG AC500V LI	00	32	**35165.0080**	3	N 5	0,002	0,004	4,10
NH-SI 00 35A GG AC500V LI	00	35	**35165.0090**	3	N 5	0,002	0,004	4,10
NH-SI 00 40A GG AC500V LI	00	40	**35165.0100**	3	N 5	0,002	0,004	4,10
NH-SI 00 50A GG AC500V LI	00	50	**35165.0110**	3	N 5	0,002	0,004	4,10
NH-SI 00 63A GG AC500V LI	00	63	**35165.0120**	3	N 5	0,002	0,004	4,10
NH-SI 00 80A GG AC500V LI	00	80	**35165.0130**	3	N 5	0,002	0,004	4,10
NH-SI 00 100A GG AC500V LI	00	100	**35165.0140**	3	N 5	0,002	0,004	4,40
NH-SI 00 125A GG AC500V LI	00	125	**35165.0150**	3	N 5	0,002	0,004	4,40
NH-SI 00 160A GG AC500V LI	00	160	**35165.0160**	3	N 5	0,002	0,007	4,70
NH-SI 1 25A GG AC500V LI	1	25	**35204.0050**	3	N 6	0,003	0,010	10,50
NH-SI 1 32A GG AC500V LI	1	32	**35204.0160**	3	N 6	0,003	0,010	10,50
NH-SI 1 35A GG AC500V LI	1	35	**35204.0060**	3	N 6	0,003	0,010	10,50
NH-SI 1 40A GG AC500V LI	1	40	**35204.0170**	3	N 6	0,003	0,010	10,50
NH-SI 1 50A GG AC500V LI	1	50	**35204.0070**	3	N 6	0,003	0,010	10,50
NH-SI 1 63A GG AC500V LI	1	63	**35204.0080**	3	N 6	0,003	0,010	10,50
NH-SI 1 80A GG AC500V LI	1	80	**35204.0090**	3	N 6	0,003	0,010	10,50
NH-SI 1 100A GG AC500V LI	1	100	**35204.0100**	3	N 6	0,003	0,010	10,50
NH-SI 1 125A GG AC500V LI	1	125	**35204.0110**	3	N 6	0,003	0,010	10,50
NH-SI 1 160A GG AC500V LI	1	160	**35204.0120**	3	N 6	0,003	0,010	10,90
NH-SI 1 200A GG AC500V LI	1	200	**35204.0130**	3	N 6	0,003	0,010	11,40
NH-SI 1 224A GG AC500V LI	1	224	**35204.0140**	3	N 6	0,003	0,010	11,40
NH-SI 1 250A GG AC500V LI	1	250	**35204.0150**	3	N 6	0,003	0,010	11,40
NH-SI 2 63A GG AC500V LI	2	63	**35116.0040**	3	N 6	0,004	0,019	13,50
NH-SI 2 80A GG AC500V LI	2	80	**35116.0050**	3	N 6	0,004	0,019	13,50
NH-SI 2 100A GG AC500V LI	2	100	**35116.0060**	3	N 6	0,004	0,019	13,50
NH-SI 2 125A GG AC500V LI	2	125	**35116.0070**	3	N 6	0,004	0,019	13,50
NH-SI 2 160A GG AC500V LI	2	160	**35116.0080**	3	N 6	0,004	0,019	13,50
NH-SI 2 200A GG AC500V LI	2	200	**35116.0090**	3	N 6	0,004	0,019	13,50
NH-SI 2 224A GG AC500V LI	2	224	**35116.0100**	3	N 6	0,004	0,019	13,50
NH-SI 2 250A GG AC500V LI	2	250	**35116.0110**	3	N 6	0,004	0,019	13,50
NH-SI 2 300A GG AC500V LI	2	300	**35116.0120**	3	N 6	0,004	0,019	15,50
NH-SI 2 315A GG AC500V LI	2	315	**35116.0130**	3	N 6	0,004	0,019	15,50
NH-SI 2 355A GG AC500V LI	2	355	**35116.0140**	3	N 6	0,004	0,019	15,50
NH-SI 2 400A GG AC500V LI	2	400	**35116.0150**	3	N 6	0,004	0,019	15,50

NH Fuse-Links 500 V gG

- Rated voltage:
  AC 500 V/DC 440 V*
- Utilization category:
  gG acc. VDE 0636-2 +
  VDE 0636-1
- IEC 60269-2
- Breaking capacity:
  120 kA (AC 500 V)/25 kA
  (DC 440 V)

* Size 000 DC 220 V

For more information
see page **40**

35001.1000

NH Fuse-Links for cable and line protection, AC 500 V gG

Properties:
- Front indicator
- Dead gripping lugs of special polymer
- Fuse element copper

Description	Size	Amps	Order-No.	PU	PG	Sur. Ag	Sur. Cu	Price €/pc.
NH-SI 000 2A GG AC500V LP AS	000	2	**35001.0020**	10	N 5	0,001	0,003	4,10
NH-SI 000 4A GG AC500V LP AS	000	4	**35001.0040**	10	N 5	0,001	0,003	4,10
NH-SI 000 6A GG AC500V LP AS	000	6	**35001.0060**	10	N 5	0,001	0,003	4,10
NH-SI 000 10A GG AC500V LP AS	000	10	**35001.0100**	10	N 5	0,001	0,003	4,10
NH-SI 000 16A GG AC500V LP AS	000	16	**35001.0160**	10	N 5	0,001	0,003	3,40
NH-SI 000 20A GG AC500V LP AS	000	20	**35001.0200**	10	N 5	0,001	0,003	3,40
NH-SI 000 25A GG AC500V LP AS	000	25	**35001.0250**	10	N 5	0,001	0,003	3,40
NH-SI 000 32A GG AC500V LP AS	000	32	**35001.0320**	10	N 5	0,001	0,003	3,40
NH-SI 000 35A GG AC500V LP AS	000	35	**35001.0350**	10	N 5	0,001	0,003	3,40
NH-SI 000 40A GG AC500V LP AS	000	40	**35001.0400**	10	N 5	0,001	0,003	3,40
NH-SI 000 50A GG AC500V LP AS	000	50	**35001.0500**	10	N 5	0,001	0,003	3,40
NH-SI 000 63A GG AC500V LP AS	000	63	**35001.0630**	10	N 5	0,001	0,003	3,40
NH-SI 000 80A GG AC500V LP AS	000	80	**35001.0800**	10	N 5	0,001	0,003	3,40
NH-SI 000 100A GG AC500V LP AS	000	100	**35001.1000**	10	N 5	0,001	0,003	3,40

NH Fuse-Links 500 V gL

- Rated voltage:
  AC 500 V/DC 440 V*
- Utilization category:
  gL acc. VDE 0636/21 +
  VDE 0636/1
- IEC 60269-2
- Breaking capacity:
  120 kA (AC 500 V)/25 kA
  (DC 440 V)

* Size 00 DC 220 V

NH Fuse-Links for cable and line protection, AC 500 V gL

Properties:
- With striker for fuse monitoring
- Live metal gripping lugs
- Fuse element copper

Description	Size	Amps	Order-No.	PU	PG	Sur. Ag	Sur. Cu	Price €/pc.
NH-Si 00 6A gL SM	00	6	**35207.0010**	10	N 5	0,002	0,004	11,40
NH-Si 00 10A gL SM	00	10	**35207.0020**	10	N 5	0,002	0,004	11,40
NH-Si 00 16A gL SM	00	16	**35207.0030**	10	N 5	0,002	0,004	11,40
NH-Si 00 20A gL SM	00	20	**35207.0040**	10	N 5	0,002	0,004	11,40
NH-Si 00 25A gL SM	00	25	**35207.0050**	10	N 5	0,002	0,004	11,40
NH-Si 00 32A gL SM	00	32	**35207.0060**	10	N 5	0,002	0,004	10,40
NH-Si 00 35A gL SM	00	35	**35207.0070**	10	N 5	0,002	0,004	10,40
NH-Si 00 40A gL SM	00	40	**35207.0080**	10	N 5	0,002	0,004	10,40
NH-Si 00 50A gL SM	00	50	**35207.0090**	10	N 5	0,002	0,004	10,40
NH-Si 00 63A gL SM	00	63	**35207.0100**	10	N 5	0,002	0,004	10,40
NH-Si 00 80A gL SM	00	80	**35207.0110**	10	N 5	0,002	0,004	10,40
NH-Si 00 100A gL SM	00	100	**35207.0120**	10	N 5	0,002	0,004	10,40
NH-Si 00 125A gL SM	00	125	**35207.0130**	10	N 5	0,002	0,004	11,40

NH Fuse-Links 500 V gL

- Rated voltage:
  AC 500 V/DC 440 V*
- Utilization category:
  gL acc. VDE 0636/21 +
  VDE 0636/1
- IEC 60269-2
- Breaking capacity:
  120 kA (AC 500 V)/25 kA
  (DC 440 V)

* Size 00 DC 220 V

35010.0160

NH Fuse-Links for cable and line protection, AC 500 V gL

Properties:
- Middle indicator
- Live metal gripping lugs
- Fuse element pure silver

Description	Size	Amps	Order-No.	PU	PG	Sur. Ag	Sur. Cu	Price €/pc.
NH-SI 00 2A GL AG AC500V	00	2	**35010.0010**	10	N 1	0,002	0,004	7,30
NH-SI 00 4A GL AG AC500V	00	4	**35010.0020**	10	N 1	0,002	0,004	7,30
NH-SI 00 6A GL AG AC500V	00	6	**35010.0030**	10	N 1	0,002	0,004	7,30
NH-SI 00 10A GL AG AC500V	00	10	**35010.0040**	10	N 1	0,002	0,004	7,30
NH-SI 00 16A GL AG AC500V	00	16	**35010.0050**	10	N 1	0,003	0,004	7,30
NH-SI 00 20A GL AG AC500V	00	20	**35010.0060**	10	N 1	0,004	0,004	7,30
NH-SI 00 25A GL AG AC500V	00	25	**35010.0070**	10	N 1	0,004	0,004	7,30
NH-SI 00 32A GL AG AC500V	00	32	**35010.0080**	10	N 1	0,004	0,004	6,20
NH-SI 00 35A GL AG AC500V	00	35	**35010.0090**	10	N 1	0,006	0,004	6,20
NH-SI 00 40A GL AG AC500V	00	40	**35010.0100**	10	N 1	0,006	0,004	6,20
NH-SI 00 50A GL AG AC500V	00	50	**35010.0110**	10	N 1	0,008	0,004	6,20
NH-SI 00 63A GL AG AC500V	00	63	**35010.0120**	10	N 1	0,010	0,004	6,20
NH-SI 00 80A GL AG AC500V	00	80	**35010.0130**	10	N 1	0,013	0,004	6,20
NH-SI 00 100A GL AG AC500V	00	100	**35010.0140**	10	N 1	0,016	0,004	6,20
NH-SI 00 125A GL AG AC500V	00	125	**35010.0150**	10	N 1	0,017	0,004	7,30
NH-SI 00 160A GL AG AC500V	00	160	**35010.0160**	10	N 1	0,023	0,004	10,00
NH-SI 1/6A GL AG AC500V	1	6	**35034.0010**	3	N 1	0,004	0,010	10,40
NH-SI 1/10A GL AG AC500V	1	10	**35034.0020**	3	N 1	0,004	0,010	10,40
NH-SI 1/16A GL AG AC500V	1	16	**35034.0030**	3	N 1	0,004	0,010	10,40
NH-SI 1/20A GL AG AC500V	1	20	**35034.0040**	3	N 1	0,004	0,010	10,40
NH-SI 1/25A GL AG AC500V	1	25	**35034.0050**	3	N 1	0,006	0,010	10,40
NH-SI 1/35A GL AG AC500V	1	35	**35034.0060**	3	N 1	0,007	0,010	10,40
NH-SI 1/50A GL AG AC500V	1	50	**35034.0070**	3	N 1	0,009	0,010	10,40
NH-SI 1/63A GL AG AC500V	1	63	**35034.0080**	3	N 1	0,011	0,010	10,40
NH-SI 1/80A GL AG AC500V	1	80	**35034.0090**	3	N 1	0,016	0,010	10,40
NH-SI 1/100A GL AG AC500V	1	100	**35034.0100**	3	N 1	0,018	0,010	10,40
NH-SI 1/125A GL AG AC500V	1	125	**35034.0110**	3	N 1	0,039	0,010	12,40
NH-SI 1 160A GL AG AC500V	1	160	**35034.0120**	3	N 1	0,039	0,010	15,00
NH-SI 1 200A GL AG AC500V	1	200	**35034.0130**	3	N 1	0,041	0,010	22,00
NH-SI 1 224A GL AG AC500V	1	224	**35034.0140**	3	N 1	0,052	0,010	18,00
NH-SI 1 250A GL AG AC500V	1	250	**35034.0150**	3	N 1	0,059	0,010	18,00
NH-SI 2/25A GL AG AC500V	2	25	**35053.0010**	3	N 1	0,008	0,019	14,50
NH-SI 2/35A GL AG AC500V	2	35	**35053.0020**	3	N 1	0,008	0,019	14,50
NH-SI 2/50A GL AG AC500V	2	50	**35053.0030**	3	N 1	0,011	0,019	14,50
NH-SI 2/63A GL AG AC500V	2	63	**35053.0040**	3	N 1	0,013	0,019	14,50
NH-SI 2/80A GL AG AC500V	2	80	**35053.0050**	3	N 1	0,018	0,019	14,50
NH-SI 2/100A GL AG AC500V	2	100	**35053.0060**	3	N 1	0,019	0,019	14,50
NH-SI 2/125A GL AG AC500V	2	125	**35053.0070**	3	N 1	0,025	0,019	15,50
NH-SI 2/160A GL AG AC500V	2	160	**35053.0080**	3	N 1	0,032	0,019	15,50
NH-SI 2/200A GL AG AC500V	2	200	**35053.0090**	3	N 1	0,043	0,019	15,50
NH-SI 2/224A GL AG AC500V	2	224	**35053.0100**	3	N 1	0,056	0,019	17,60
NH-SI 2 250A GL AG AC500V	2	250	**35053.0110**	3	N 1	0,056	0,019	21,00
NH-SI 2 300A GL AG AC500V	2	300	**35053.0120**	3	N 1	0,069	0,019	22,00
NH-SI 2 315A GL AG AC500V	2	315	**35053.0130**	3	N 1	0,069	0,019	22,00
NH-SI 2 355A GL AG AC500V	2	355	**35053.0140**	3	N 1	0,088	0,019	25,00
NH-SI 2 400A GL AG AC500V	2	400	**35053.0150**	3	N 1	0,231	0,019	65,00

NH Fuse-Links 500 V gL

- Rated voltage:
  AC 500 V/DC 440 V*
- Utilization category:
  gL acc. VDE 0636/21 +
  VDE 0636/1
- IEC 60269-2
- Breaking capacity:
  120 kA (AC 500 V)/25 kA
  (DC 440 V)

* Size 00 DC 220 V

35164.0160

NH Fuse-Links for cable and line protection, AC 500 V gL

Properties:
- Middle indicator
- Dead metal gripping lugs
- Fuse element pure silver

Description	Size	Amps	Order-No.	PU	PG	Sur. Ag	Sur. Cu	Price €/pc.
NH-SI 00 2A GL AG AC500V LI	00	2	**35164.0010**	10	N 1	0,002	0,004	8,30
NH-SI 00 4A GL AG AC500V LI	00	4	**35164.0020**	10	N 1	0,002	0,004	8,30
NH-SI 00 6A GL AG AC500V LI	00	6	**35164.0030**	10	N 1	0,002	0,004	8,30
NH-SI 00 10A GL AG AC500V LI	00	10	**35164.0040**	10	N 1	0,003	0,004	8,30
NH-SI 00 16A GL AG AC500V LI	00	16	**35164.0050**	10	N 1	0,004	0,004	8,30
NH-SI 00 20A GL AG AC500V LI	00	20	**35164.0060**	10	N 1	0,004	0,004	8,30
NH-SI 00 25A GL AG AC500V LI	00	25	**35164.0070**	10	N 1	0,004	0,004	8,30
NH-SI 00 32A GL AG AC500V LI	00	32	**35164.0080**	10	N 1	0,006	0,004	7,30
NH-SI 00 35A GL AG AC500V LI	00	35	**35164.0090**	10	N 1	0,006	0,004	7,30
NH-SI 00 40A GL AG AC500V LI	00	40	**35164.0100**	10	N 1	0,006	0,004	7,30
NH-SI 00 50A GL AG AC500V LI	00	50	**35164.0110**	10	N 1	0,008	0,004	7,30
NH-SI 00 63A GL AG AC500V LI	00	63	**35164.0120**	10	N 1	0,010	0,004	7,30
NH-SI 00 80A GL AG AC500V LI	00	80	**35164.0130**	10	N 1	0,013	0,004	7,30
NH-SI 00 100A GL AG AC500V LI	00	100	**35164.0140**	10	N 1	0,016	0,004	7,30
NH-SI 00 125A GL AG AC500V LI	00	125	**35164.0150**	10	N 1	0,017	0,004	8,30
NH-SI 00 160A GL AG AC500V LI	00	160	**35164.0160**	10	N 1	0,023	0,004	11,00
NH-SI 1 6A GL AG AC500V LI	1	6	**35203.0010**	3	N 1	0,004	0,010	12,40
NH-SI 1 10A GL AG AC500V LI	1	10	**35203.0020**	3	N 1	0,004	0,010	12,40
NH-SI 1 16A GL AG AC500V LI	1	16	**35203.0030**	3	N 1	0,004	0,010	12,40
NH-SI 1 20A GL AG AC500V LI	1	20	**35203.0040**	3	N 1	0,004	0,010	12,40
NH-SI 1 25A GL AG AC500V LI	1	25	**35203.0050**	3	N 1	0,006	0,010	12,40
NH-SI 1 35A GL AG AC500V LI	1	35	**35203.0060**	3	N 1	0,007	0,010	12,40
NH-SI 1 50A GL AG AC500V LI	1	50	**35203.0070**	3	N 1	0,009	0,010	12,40
NH-SI 1 63A GL AG AC500V LI	1	63	**35203.0080**	3	N 1	0,011	0,010	12,40
NH-SI 1 80A GL AG AC500V LI	1	80	**35203.0090**	3	N 1	0,016	0,010	12,40
NH-SI 1 100A GL AG AC500V LI	1	100	**35203.0100**	3	N 1	0,018	0,010	15,00
NH-SI 1 125A GL AG AC500V LI	1	125	**35203.0110**	3	N 1	0,039	0,010	13,50
NH-SI 1 160A GL AG AC500V LI	1	160	**35203.0120**	3	N 1	0,039	0,010	15,00
NH-SI 1 200A GL AG AC500V LI	1	200	**35203.0130**	3	N 1	0,041	0,010	18,00
NH-SI 1 224A GL AG AC500V LI	1	224	**35203.0140**	3	N 1	0,052	0,010	18,00
NH-SI 1 250A GL AG AC500V LI	1	250	**35203.0150**	3	N 1	0,059	0,010	20,00
NH-SI 2 25A GL AG AC500V LI	2	25	**35115.0010**	3	N 1	0,008	0,019	16,60
NH-SI 2 35A GL AG AC500V LI	2	35	**35115.0020**	3	N 1	0,008	0,019	16,60
NH-SI 2 50A GL AG AC500V LI	2	50	**35115.0030**	3	N 1	0,011	0,019	16,60
NH-SI 2 63A GL AG AC500V LI	2	63	**35115.0040**	3	N 1	0,013	0,019	16,60
NH-SI 2 80A GL AG AC500V LI	2	80	**35115.0050**	3	N 1	0,018	0,019	16,60
NH-SI 2 100A GL AG AC500V LI	2	100	**35115.0060**	3	N 1	0,019	0,019	16,60
NH-SI 2 125A GL AG AC500V LI	2	125	**35115.0070**	3	N 1	0,025	0,019	17,60
NH-SI 2 160A GL AG AC500V LI	2	160	**35115.0080**	3	N 1	0,032	0,019	17,60
NH-SI 2 200A GL AG AC500V LI	2	200	**35115.0090**	3	N 1	0,043	0,019	25,90
NH-SI 2 224A GL AG AC500V LI	2	224	**35115.0100**	3	N 1	0,056	0,019	22,00
NH-SI 2 250A GL AG AC500V LI	2	250	**35115.0110**	3	N 1	0,056	0,019	29,00
NH-SI 2 300A GL AG AC500V LI	2	300	**35115.0120**	3	N 1	0,069	0,019	32,10
NH-SI 2 315A GL AG AC500V LI	2	315	**35115.0130**	3	N 1	0,069	0,019	32,10
NH-SI 2 355A GL AG AC500V LI	2	355	**35115.0140**	3	N 1	0,088	0,019	37,30
NH-SI 2 400A GL AG AC500V LI	2	400	**35115.0150**	3	N 1	0,231	0,019	70,40

NH Fuse-Links 500 V gL

- Rated voltage:
  AC 500 V/DC 440 V*
- Utilization category:
  gL acc. VDE 0636/21 +
  VDE 0636/1
- IEC 60269-2
- Breaking capacity:
  120 kA (AC 500 V)/25 kA
  (DC 440 V)

* Size 00 DC 220 V

NH Fuse-Links for cable and line protection, AC 500 V gL

Properties:
- Middle indicator (specially for meshed network)
- Dead metal gripping lugs
- Fuse element pure silver

Description	Size	Amps	Order-No.	PU	PG	Sur. Ag	Sur. Cu	Price €/pc.
NH-SI 00 10A GL AG AC500V LI AU	00	10	**35164.0270**	10	N 1	0,023	0,004	8,30
NH-SI 00 35A GL AG AC500V LI AU	00	35	**35164.0170**	10	N 1	0,002	0,004	8,30
NH-SI 00 40A GL AG AC500V LI AU	00	40	**35164.0180**	10	N 1	0,003	0,004	8,30
NH-SI 00 50A GL AG AC500V LI AU	00	50	**35164.0190**	10	N 1	0,004	0,004	8,30
NH-SI 00 63A GL AG AC500V LI AU	00	63	**35164.0200**	10	N 1	0,006	0,004	8,30
NH-SI 00 80A GL AG AC500V LI AU	00	80	**35164.0210**	10	N 1	0,006	0,004	8,30
NH-SI 00 100A GL AG AC500V LI AU	00	100	**35164.0220**	10	N 1	0,009	0,004	8,30
NH-SI 00 125A GL AG AC500V LI AU	00	125	**35164.0230**	10	N 1	0,010	0,004	8,30
NH-SI 00 160A GL AG AC500V LI AU	00	160	**35164.0240**	10	N 1	0,013	0,004	12,00
NH-SI 00 25A GL AG AC500V LI AU	00	25	**35164.0250**	10	N 1	0,016	0,004	8,30
NH-SI 00 16A GL AG AC500V LI AU	00	16	**35164.0260**	10	N 1	0,017	0,004	8,30
NH-SI 2 35A GL AG AC500V LI AU	2	35	**35115.0280**	3	N 1	0,008	0,019	16,60
NH-SI 2 63A GL AG AC500V LI AU	2	63	**35115.0160**	3	N 1	0,013	0,019	16,60
NH-SI 2 80A GL AG AC500V LI AU	2	80	**35115.0170**	3	N 1	0,018	0,019	16,60
NH-SI 2 100A GL AG AC500V LI AU	2	100	**35115.0180**	3	N 1	0,019	0,019	16,60
NH-SI 2 125A GL AG AC500V LI AU	2	125	**35115.0190**	3	N 1	0,025	0,019	17,60
NH-SI 2 160A GL AG AC500V LI AU	2	160	**35115.0200**	3	N 1	0,032	0,019	17,60
NH-SI 2 200A GL AG AC500V LI AU	2	200	**35115.0210**	3	N 1	0,043	0,019	21,00
NH-SI 2 224A GL AG AC500V LI AU	2	224	**35115.0220**	3	N 1	0,056	0,019	20,70
NH-SI 2 250A GL AG AC500V LI AU	2	250	**35115.0230**	3	N 1	0,056	0,019	20,70
NH-SI 2 300A GL AG AC500V LI AU	2	300	**35115.0240**	3	N 1	0,069	0,019	34,20
NH-SI 2 315A GL AG AC500V LI AU	2	315	**35115.0250**	3	N 1	0,069	0,019	33,10
NH-SI 2 355A GL AG AC500V LI AU	2	355	**35115.0260**	3	N 1	0,088	0,019	37,30
NH-SI 2 400A GL AG AC500V LI AU	2	400	**35115.0270**	3	N 1	0,231	0,019	70,40

NH Fuse-Links 690 V gG

- Rated voltage:
  AC 690 V
- Utilization category:
  gG acc. VDE 0636-2 +
  VDE 0636-1
- IEC 60269-2 + IEC 60269-1
- Application:
  For cable and line protection
- Breaking capacity:
  100 kA (630 A 50 kA)

For more information
see page **40**

35027.0100

NH Fuse-Links for cable and line protection, AC 690 V gG

Properties:
- Middle indicator
- Live metal gripping lugs
- Fuse element copper

Description	Size	Amps	Order-No.	PU	PG	Sur. Ag	Sur. Cu	Price €/pc.
NH-SI 000 2A GG AC690V	000	2	**35027.0220**	10	N 8	0,002	0,004	7,50
NH-SI 000 4A GG AC690V	000	4	**35027.0230**	10	N 8	0,002	0,004	7,50
NH-SI 000 6A GG AC690V	000	6	**35027.0010**	10	N 8	0,002	0,004	7,50
NH-SI 000 10A GG AC690V	000	10	**35027.0020**	10	N 8	0,002	0,004	7,50
NH-SI 000 16A GG AC690V	000	16	**35027.0030**	10	N 8	0,002	0,004	7,50
NH-SI 000 20A GG AC690V	000	20	**35027.0040**	10	N 8	0,002	0,004	7,50
NH-SI 000 25A GG AC690V	000	25	**35027.0050**	10	N 8	0,002	0,004	7,50
NH-SI 000 32A GG AC690V	000	32	**35027.0060**	10	N 8	0,002	0,004	7,50
NH-SI 000 35A GG AC690V	000	35	**35027.0070**	10	N 8	0,002	0,004	7,30
NH-SI 000 40A GG AC690V	000	40	**35027.0080**	10	N 8	0,002	0,004	7,30
NH-SI 000 50A GG AC690V	000	50	**35027.0090**	10	N 8	0,002	0,004	7,30
NH-SI 000 63A GG AC690V	000	63	**35027.0100**	10	N 8	0,002	0,004	7,30
NH-SI 00 80A GG AC690V	000	80	**35027.0110**	10	N 8	0,002	0,004	7,30
NH-SI 00 100A GG AC690V	000	100	**35027.0120**	10	N 8	0,002	0,004	7,30
NH-SI 1/25A GG AC690V MA	1	25	**35052.1030**	3	N 8	0,003	0,010	12,40
NH-SI 1/32A GG AC690V MA	1	32	**35052.1040**	3	N 8	0,003	0,010	12,40
NH-SI 1/35A GG AC690V MA	1	35	**35052.1050**	3	N 8	0,003	0,010	12,40
NH-SI 1/40A GG AC690V MA	1	40	**35052.1060**	3	N 8	0,003	0,010	12,40
NH-SI 1/50A GG AC690V MA	1	50	**35052.1070**	3	N 8	0,003	0,010	12,40
NH-SI 1/63A GG AC690V MA	1	63	**35052.1080**	3	N 8	0,003	0,010	12,40
NH-SI 1/80A GG AC690V MA	1	80	**35052.1090**	3	N 8	0,003	0,010	12,40
NH-SI 1/100A GG AC690V MA	1	100	**35052.1100**	3	N 8	0,003	0,010	12,40
NH-SI 1/125A GG AC690V MA	1	125	**35052.1110**	3	N 8	0,003	0,010	12,40
NH-SI 1/160A GG AC690V MA	1	160	**35052.1120**	3	N 8	0,003	0,010	12,40
NH-SI 1 200A GG AC690V MA	1	200	**35052.1130**	3	N 8	0,003	0,010	13,50
NH-SI 1 250A GG AC690V MA	1	250	**35052.1140**	3	N 8	0,003	0,010	13,50
NH-SI 2/25A GG AC690V MA	2	25	**35124.1230**	3	N 8	0,004	0,018	16,60
NH-SI 2/35A GG AC690V MA	2	35	**35124.1010**	3	N 8	0,004	0,018	16,60
NH-SI 2/50A GG AC690V MA	2	50	**35124.1020**	3	N 8	0,004	0,018	16,60
NH-SI 2/63A GG AC690V MA	2	63	**35124.1030**	3	N 8	0,004	0,018	16,60
NH-SI 2/80A GG AC690V MA	2	80	**35124.1040**	3	N 8	0,004	0,018	16,60
NH-SI 2/100A GG AC690V MA	2	100	**35124.1050**	3	N 8	0,004	0,018	16,60
NH-SI 2/125A GG AC690V MA	2	125	**35124.1060**	3	N 8	0,004	0,018	17,60
NH-SI 2/160A GG AC690V MA	2	160	**35124.1070**	3	N 8	0,004	0,018	17,60
NH-SI 2/200A GG AC690V MA	2	200	**35124.1080**	3	N 8	0,004	0,018	17,60
NH-SI 2/250A GG AC690V MA	2	250	**35124.1090**	3	N 8	0,004	0,018	19,70
NH-SI 2 315A GG AC690V MA	2	315	**35124.1100**	3	N 8	0,004	0,018	21,70
NH-SI 2 355A GG AC690V MA	2	355	**35124.1110**	3	N 8	0,004	0,018	21,70
NH-SI 2 400A GG AC690V MA	2	400	**35124.1220**	3	N 8	0,004	0,018	21,70

NH Fuse-Links 690 V gG

- Rated voltage:
  AC 690 V
- Utilization category:
  gG acc. VDE 0636-2 +
  VDE 0636-1
- IEC 60269-2 + IEC 60269-1
- Application:
  For cable and line protection
- Breaking capacity:
  100 kA (630 A 50 kA)

For more information
see page **40**

35027.0100

NH Fuse-Links for cable and line protection, AC 690 V gG

Properties:
- Middle indicator
- Live metal gripping lugs
- Fuse element copper

Description	Size	Amps	Order-No.	PU	PG	Sur. Ag	Sur. Cu	Price €/pc.
NH-SI 3/63A GG AC690V MA	3	63	**35135.1080**	3	N 8	0,007	0,026	28,00
NH-SI 3/80A GG AC690V MA	3	80	**35135.1090**	3	N 8	0,007	0,026	28,00
NH-SI 3/100A GG AC690V MA	3	100	**35135.1100**	3	N 8	0,007	0,026	28,00
NH-SI 3/125A GG AC690V MA	3	125	**35135.1110**	3	N 8	0,007	0,026	28,00
NH-SI 3/160A GG AC690V MA	3	160	**35135.1120**	3	N 8	0,007	0,026	28,00
NH-SI 3/200A GG AC690V MA	3	200	**35135.1070**	3	N 8	0,007	0,026	28,00
NH-SI 3/224A GG AC690V MA	3	224	**35135.1130**	3	N 8	0,007	0,026	28,00
NH-SI 3/250A GG AC690V MA	3	250	**35135.1040**	3	N 8	0,007	0,026	28,00
NH-SI 3/315A GG AC690V MA	3	315	**35135.1050**	3	N 8	0,007	0,026	30,00
NH-SI 3/355A GG AC690V MA	3	355	**35135.1060**	3	N 8	0,007	0,026	30,00
NH-SI 3/400A GG AC690V MA	3	400	**35135.1020**	3	N 8	0,007	0,026	30,00
NH-SI 3 500A GG AC690V MA	3	500	**35135.1010**	3	N 8	0,007	0,026	32,10
NH-SI 3 630A GG AC690V MA	3	630	**35135.1140**	3	N 8	0,007	0,026	on demand

NH Fuse-Links 400 V gTr

- Rated voltage:
  AC 400V gTr
- Utilization category:
  gTr acc. VDE 0636/2011
- Application:
  For transformer protection
- Breaking capacity:
  100 kA

For more information
see page **40**

35081.0110

NH Fuse-Links for transformer protection, AC 400 V gTr

Properties:
- Middle indicator
- Live metal gripping lugs
- Fuse element copper

Description	Size	Amps	Order-No.	PU	PG	Sur. Ag	Sur. Cu	Price €/pc.
NH-SI 2 50KVA GTR AC400V MA	2	72	**35076.1010**	3	N 7	0,004	0,019	26,90
NH-SI 2 75KVA GTR AC400V MA	2	108	**35076.1020**	3	N 7	0,004	0,019	26,90
NH-SI 2 100KVA GTR AC400V MA	2	144	**35076.1030**	3	N 7	0,004	0,019	26,90
NH-SI 2 125KVA GTR AC400V MA	2	180	**35076.1040**	3	N 7	0,004	0,019	26,90
NH-SI 2 160KVA GTR AC400V MA	2	231	**35076.1050**	3	N 7	0,004	0,019	26,90
NH-SI 2 200KVA GTR AC400V MA	2	289	**35076.1060**	3	N 7	0,004	0,019	29,00
NH-SI 2 250KVA GTR AC400V MA	2	361	**35076.1070**	3	N 7	0,004	0,019	30,00
NH-SI 3 100KVA GTR AC400V MA	3	144	**35081.1040**	1	N 7	0,005	0,026	41,40
NH-SI 3 160KVA GTR AC400V MA	3	231	**35081.1060**	1	N 7	0,005	0,026	41,40
NH-SI 3 200KVA GTR AC400V MA	3	289	**35081.1050**	1	N 7	0,005	0,026	41,40
NH-SI 3 250KVA GTR AC400V MA	3	361	**35081.1010**	1	N 7	0,005	0,026	41,40
NH-SI 3 315KVA GTR AC400V MA	3	455	**35081.1020**	1	N 7	0,005	0,026	41,40
NH-SI 3 400KVA GTR AC400V MA	3	577	**35081.1030**	1	N 7	0,005	0,026	41,40
NH-SI 3 500KVA GTR AC400V MA	3	722	**35081.0100**	1	N 7	0,020	0,080	82,80
NH-SI 3 630KVA GTR AC400V MA	3	909	**35081.0110**	1	N 7	0,020	0,080	82,80
NH-SI 4A 100KVA GTR AC400V MA	4a	144	**35100.0100**	1	N 7	0,020	0,080	120,10
NH-SI 4A 160KVA GTR AC400V MA	4a	231	**35100.0110**	1	N 7	0,020	0,080	120,10
NH-SI 4A 200KVA GTR AC400V MA	4a	289	**35100.0160**	1	N 7	0,020	0,080	120,10
NH-SI 4A 250KVA GTR AC400V MA	4a	361	**35100.0120**	1	N 7	0,020	0,080	120,10
NH-SI 4A 315KVA GTR AC400V MA	4a	455	**35100.0170**	1	N 7	0,020	0,080	120,10
NH-SI 4A 400KVA GTR AC400V MA	4a	577	**35100.0130**	1	N 7	0,020	0,080	124,20
NH-SI 4A 500KVA GTR AC400V MA	4a	722	**35100.0140**	1	N 7	0,020	0,080	124,20
NH-SI 4A 630KVA GTR AC400V MA	4a	909	**35100.0150**	1	N 7	0,020	0,080	124,20
NH-SI 4A 800KVA GTR AC400V MA	4a	1155	**35100.0040**	1	N 7	0,020	0,080	124,20
NH-SI 4A 1000KVA GTR AC400V	4a	1443	**35100.0190**	1	N 7	0,020	0,080	124,20

NH Fuse-Links 500 V gR

- Rated voltage:
  AC 500V
- Utilization category:
  gR acc. VDE 0636/4
- Application:
  For protection of semiconductors
- Breaking capacity:
  120 kA

For more information see page **40**

35058.0110

NH Fuse-Links for protection of semiconductors, AC 500 V gR

Properties:
- Middle indicator
- Live metal gripping lugs
- Fuse element pure silver

Description	Size	Amps	Order-No.	PU	PG	Sur. Ag	Sur. Cu	Price €/pc.
NH-SI 00 16A GR AC500V LS	00	16	**35024.0180**	10	N 2	0,003	0,004	14,50
NH-SI 00 20A GR AC500V LS	00	20	**35024.0170**	10	N 2	0,003	0,004	14,50
NH-SI 00 25A GR AC500V LS	00	25	**35024.0190**	10	N 2	0,003	0,004	14,50
NH-SI 00 35A GR AC500V LS	00	35	**35024.0010**	10	N 2	0,008	0,004	14,00
NH-SI 00 40A GR AC500V LS	00	40	**35024.0020**	10	N 2	0,008	0,004	14,50
NH-SI 00 50A GR AC500V LS	00	50	**35024.0030**	10	N 2	0,010	0,004	14,50
NH-SI 00 63A GR AC500V LS	00	63	**35024.0040**	10	N 2	0,010	0,004	14,50
NH-SI 00 80A GR AC500V LS	00	80	**35024.0050**	10	N 2	0,010	0,004	14,50
NH-SI 00 100A GR AC500V LS	00	100	**35024.0060**	10	N 2	0,010	0,004	15,50
NH-SI 00 125A GR AC500V LS	00	125	**35024.0070**	10	N 2	0,012	0,004	18,60
NH-SI 00 160A GR AC500V LS	00	160	**35024.0080**	10	N 2	0,015	0,004	20,70
NH-SI 1 35A GR AC500V LS	1	35	**35040.0010**	3	N 2	0,011	0,010	29,00
NH-SI 1 50A GR AC500V LS	1	50	**35040.0020**	3	N 2	0,012	0,010	29,00
NH-SI 1 63A GR AC500V LS	1	63	**35040.0030**	3	N 2	0,017	0,010	29,00
NH-SI 1 80A GR AC500V LS	1	80	**35040.0040**	3	N 2	0,022	0,010	29,00
NH-SI 1 100A GR AC500V LS	1	100	**35040.0050**	3	N 2	0,024	0,010	31,10
NH-SI 1 125A GR AC500V LS	1	125	**35040.0060**	3	N 2	0,033	0,010	31,10
NH-SI 1 160A GR AC500V LS	1	160	**35040.0070**	3	N 2	0,043	0,010	31,10
NH-SI 1 200A GR AC500V LS	1	200	**35040.0080**	3	N 2	0,053	0,010	31,10
NH-SI 1 224A GR AC500V LS	1	224	**35040.0090**	3	N 2	0,063	0,010	34,20
NH-SI 1 250A GR AC500V LS	1	250	**35040.0100**	3	N 2	0,070	0,010	34,20
NH-SI 2 80A GR AC500V LS	2	80	**35058.0010**	3	N 2	0,023	0,019	35,20
NH-SI 2 100A GR AC500V LS	2	100	**35058.0020**	3	N 2	0,026	0,019	35,20
NH-SI 2 125A GR AC500V LS	2	125	**35058.0030**	3	N 2	0,036	0,019	35,20
NH-SI 2 160A GR AC500V LS	2	160	**35058.0040**	3	N 2	0,046	0,019	36,20
NH-SI 2 200A GR AC500V LS	2	200	**35058.0050**	3	N 2	0,056	0,019	37,30
NH-SI 2 224A GR AC500V LS	2	224	**35058.0060**	3	N 2	0,064	0,019	39,30
NH-SI 2 250A GR AC500V LS	2	250	**35058.0070**	3	N 2	0,071	0,019	39,30
NH-SI 2 300A GR AC500V LS	2	300	**35058.0080**	3	N 2	0,116	0,019	43,50
NH-SI 2 315A GR AC500V LS	2	315	**35058.0090**	3	N 2	0,128	0,019	47,60
NH-SI 2 355A GR AC500V LS	2	355	**35058.0100**	3	N 2	0,153	0,019	47,60
NH-SI 2 400A GR AC500V LS	2	400	**35058.0110**	3	N 2	0,159	0,019	50,70
NH-SI 3 315A GR AC500V LS	3	315	**35079.0010**	1	N 2	0,133	0,026	58,00
NH-SI 3 355A GR AC500V LS	3	355	**35079.0020**	1	N 2	0,154	0,026	58,00
NH-SI 3 400A GR AC500V LS	3	400	**35079.0030**	1	N 2	0,161	0,026	62,10
NH-SI 3 425A GR AC500V LS	3	425	**35079.0040**	1	N 2	0,178	0,026	62,10
NH-SI 3 500A GR AC500V LS	3	500	**35079.0050**	1	N 2	0,184	0,026	67,30
NH-SI 3 630A GR AC500V LS	3	630	**35079.0060**	1	N 2	0,232	0,026	72,50

NH Fuse-Links 500 V gR

- Rated voltage:
  AC 500V
- Utilization category:
  gR acc. VDE 0636/4
- Application:
  For protection of semiconductors
- Breaking capacity:
  120 kA

For more information see page **40**

35060.0150

NH Fuse-Links for protection of semiconductors, AC 500 V gR

Properties:
- Middle indicator
- Live metal gripping lugs
- Fuse element pure silver
- With striker

Description	Size	Amps	Order-No.	PU	PG	Sur. Ag	Sur. Cu	Price €/pc.
NH-SI 00 16A GR AC500V SM	00	16	**35218.0010**	10	N 2	0,002	0,001	22,80
NH-SI 00 20A GR AC500V SM	00	20	**35218.0020**	10	N 2	0,002	0,001	22,80
NH-SI 00 25A GR AC500V SM	00	25	**35218.0030**	10	N 2	0,002	0,001	22,80
NH-SI 00 35A GR AC500V SM	00	35	**35218.0040**	10	N 2	0,007	0,001	22,80
NH-SI 00 40A GR AC500V SM	00	40	**35218.0050**	10	N 2	0,007	0,001	22,80
NH-SI 00 50A GR AC500V SM	00	50	**35218.0060**	10	N 2	0,009	0,001	22,80
NH-SI 00 63A GR AC500V SM	00	63	**35218.0070**	10	N 2	0,006	0,001	22,80
NH-SI 00 80A GR AC500V SM	00	80	**35218.0080**	10	N 2	0,008	0,001	22,80
NH-SI 00 100A GR AC500V SM	00	100	**35218.0090**	10	N 2	0,009	0,001	23,80
NH-SI 00 125A GR AC500V SM	00	125	**35218.0100**	10	N 2	0,012	0,001	26,90
NH-SI 1 35A GR AC500V LS SM	1	35	**35046.0010**	1	N 2	0,011	0,012	45,50
NH-SI 1 50A GR AC500V LS SM	1	50	**35046.0020**	1	N 2	0,012	0,012	45,50
NH-SI 1 63A GR AC500V LS SM	1	63	**35046.0030**	1	N 2	0,017	0,012	45,50
NH-SI 1 80A GR AC500V LS SM	1	80	**35046.0040**	1	N 2	0,022	0,012	45,50
NH-SI 1 100A GR AC500V LS SM	1	100	**35046.0050**	1	N 2	0,024	0,012	46,60
NH-SI 1 160A GR AC500V LS SM	1	160	**35046.0070**	1	N 2	0,043	0,012	47,60
NH-SI 1 200A GR AC500V LS SM	1	200	**35046.0080**	1	N 2	0,053	0,012	47,60
NH-SI 1 224A GR AC500V LS SM	1	224	**35046.0090**	1	N 2	0,063	0,012	49,70
NH-SI 1 250A GR AC500V LS SM	1	250	**35046.0100**	1	N 2	0,070	0,012	49,70
NH-SI 2 80A GR AC500V LS SM	2	80	**35060.0050**	1	N 2	0,023	0,018	50,70
NH-SI 2 100A GR AC500V LS SM	2	100	**35060.0060**	1	N 2	0,026	0,018	50,70
NH-SI 2 125A GR AC500V LS SM	2	125	**35060.0070**	1	N 2	0,036	0,018	50,70
NH-SI 2 160A GR AC500V LS SM	2	160	**35060.0080**	1	N 2	0,046	0,018	51,80
NH-SI 2 200A GR AC500V LS SM	2	200	**35060.0090**	1	N 2	0,056	0,018	52,80
NH-SI 2 224A GR AC500V LS SM	2	224	**35060.0100**	1	N 2	0,064	0,018	55,90
NH-SI 2 250A GR AC500V LS SM	2	250	**35060.0110**	1	N 2	0,071	0,018	55,90
NH-SI 2 300A GR AC500V LS SM	2	300	**35060.0120**	1	N 2	0,116	0,018	59,00
NH-SI 2 315A GR AC500V LS SM	2	315	**35060.0130**	1	N 2	0,128	0,018	63,10
NH-SI 2 355A GR AC500V LS SM	2	355	**35060.0140**	1	N 2	0,153	0,018	63,10
NH-SI 2 400A GR AC500V LS SM	2	400	**35060.0150**	1	N 2	0,159	0,018	66,20
NH-SI 3 315A GR AC500V LS SM	3	315	**35086.0010**	1	N 2	0,133	0,026	74,50
NH-SI 3 355A GR AC500V LS SM	3	355	**35086.0020**	1	N 2	0,154	0,026	74,50
NH-SI 3 400A GR AC500V LS SM	3	400	**35086.0030**	1	N 2	0,161	0,026	81,80
NH-SI 3 425A GR AC500V LS SM	3	425	**35086.0040**	1	N 2	0,178	0,026	81,80
NH-SI 3 500A GR AC500V LS SM	3	500	**35086.0050**	1	N 2	0,184	0,026	82,80
NH-SI 3 630A GR AC500V LS SM	3	630	**35086.0060**	1	N 2	0,207	0,026	82,80

NH Fuse-Links 500 V gR

- Rated voltage:
  AC 500 V
- Utilization category:
  gR acc. VDE 0636/4
- Application:
  For protection of
  semiconductors
- Breaking capacity:
  120 kA

For more information
see page **40**

35209.0070

NH Maintenance Fuse-Link 500 V gR

Properties:
- Special marking
- Dead metal gripping lugs
- Fuse element pure silver

Description	Size	Amps	Order-No.	PU	PG	Sur. Ag	Sur. Cu	Price €/pc.
NH-ARBEITSSICHERUNG 2 80A GR AC500V LI	2	80	**35209.0010**	3	N 5	0,023	0,019	36,20
NH-ARBEITSSICHERUNG 2 100A GR AC500V LI	2	100	**35209.0020**	3	N 5	0,026	0,019	36,20
NH-ARBEITSSICHERUNG 2 125A GR AC500V LI	2	125	**35209.0030**	3	N 5	0,036	0,019	36,20
NH-ARBEITSSICHERUNG 2 160A GR AC500V LI	2	160	**35209.0040**	3	N 5	0,046	0,019	37,30
NH-ARBEITSSICHERUNG 2 200A GR AC500V LI	2	200	**35209.0050**	3	N 5	0,056	0,019	38,30
NH-ARBEITSSICHERUNG 2 224A GR AC500V LI	2	224	**35209.0060**	3	N 5	0,064	0,019	40,40
NH-ARBEITSSICHERUNG 2 250A GR AC500V LI	2	250	**35209.0070**	3	N 5	0,071	0,019	40,40
NH-ARBEITSSICHERUNG 2 300A GR AC500V LI	2	300	**35209.0080**	3	N 5	0,116	0,019	44,50
NH-ARBEITSSICHERUNG 2 315A GR AC500V LI	2	315	**35209.0090**	3	N 5	0,128	0,019	48,70

NH Fuse-Links 1000 V gB/aM

For more information
see page **40**

35041.0180

NH Fuse-Links 1L, 1000 V gB

Properties:
- AC 1000 V
- Breaking capacity 25kA
- gB acc. VDE 0636/2011

Description	Size	Amps	Order-No.	PU	PG	Sur. Ag	Sur. Cu	Price €/pc.
NH-SI 1L 160A GB AC1000V LS AS	1L	10	**35041.0160**	1	N 4	0,042	0,019	37,30
NH-SI 1L 16A GB AC1000V LS AS	1L	16	**35041.0420**	1	N 4	0,006	0,019	38,30
NH-SI 1L 35A GB AC1000V LS AS	1L	35	**35041.0100**	1	N 4	0,009	0,019	37,30
NH-SI 1L 50A GB AC1000V LS AS	1L	50	**35041.0110**	1	N 4	0,013	0,019	37,30
NH-SI 1L 63A GB AC1000V LS AS	1L	63	**35041.0120**	1	N 4	0,017	0,019	37,30
NH-SI 1L 80A GB AC1000V LS AS	1L	80	**35041.0130**	1	N 4	0,021	0,019	37,30
NH-SI 1L 100A GB AC1000V LS AS	1L	100	**35041.0140**	1	N 4	0,028	0,019	37,30
NH-SI 1L 125A GB AC1000V LS AS	1L	125	**35041.0150**	1	N 4	0,038	0,019	37,30
NH-SI 1L 200A GB AC1000V LS AS	1L	200	**35041.0170**	1	N 4	0,054	0,019	38,30
NH-SI 1L 250A GB AC1000V LS AS	1L	250	**35041.0180**	1	N 4	0,068	0,019	43,50

35151.0020

NH Fuse-Links for back up protection by mining equipment

Properties:
- AC 1000 V
- Breaking capacity 25kA
- aM acc. VDE 0636/22

Description	Size	Amps	Order-No.	PU	PG	Sur. Ag	Sur. Cu	Price €/pc.
NH-SI 3 125A AM AC1000V SBW	3	125	**35151.0010**	1	N 3	0,055	0,003	93,20
NH-SI 3 160A AM AC1000V SBW	3	160	**35151.0020**	1	N 3	0,071	0,003	93,20
NH-SI 3 200A AM AC1000V SBW	3	200	**35151.0030**	1	N 3	0,079	0,003	93,20
NH-SI 3 224A AM AC1000V SBW	3	224	**35151.0040**	1	N 3	0,093	0,003	98,30
NH-SI 3 250A AM AC1000V SBW	3	250	**35151.0050**	1	N 3	0,102	0,003	102,50
NH-SI 3 315A AM AC1000V SBW	3	315	**35151.0070**	1	N 3	0,126	0,003	105,60
NH-SI 3 355A AM AC1000V SBW	3	355	**35151.0080**	1	N 3	0,150	0,003	111,80
NH-SI 3 500A AM AC1000V SBW	3	500	**35151.0120**	1	N 3	0,293	0,003	134,60

NH Fuse-Links 1000 V / 1500 V TF

For more information
see page **40**

NH Fuse-Links for back up protection by mining equipment

Properties:
- AC 1000 V
- Breaking capacity 25kA
- TF acc. VDE 0660 and DIN 43620/5

Description	Size	Amps	Order-No.	PU	PG	Sur. Ag	Sur. Cu	Price €/pc.
NH-SI 3 10A TF AC1000V RHB	3	10	**35150.0010**	1	N 3	0,008	0,003	108,70
NH-SI 3 16A TF AC1000V RHB	3	16	**35150.0020**	1	N 3	0,010	0,003	108,70
NH-SI 3 20A TF AC1000V RHB	3	20	**35150.0030**	1	N 3	0,012	0,003	108,70
NH-SI 3 25A TF AC1000V RHB	3	25	**35150.0040**	1	N 3	0,014	0,003	108,70
NH-SI 3 35A TF AC1000V RHB	3	35	**35150.0050**	1	N 3	0,016	0,003	108,70
NH-SI 3 50A TF AC1000V RHB	3	50	**35150.0060**	1	N 3	0,019	0,003	108,70
NH-SI 3 63A TF AC1000V RHB	3	63	**35150.0070**	1	N 3	0,021	0,003	111,80
NH-SI 3 80A TF AC1000V RHB	3	80	**35150.0080**	1	N 3	0,028	0,003	111,80
NH-SI 3 100A TF AC1000V RHB	3	100	**35150.0090**	1	N 3	0,030	0,003	111,80
NH-SI 3 125A TF AC1000V RHB	3	125	**35150.0100**	1	N 3	0,040	0,003	111,80
NH-SI 3 160A TF AC1000V RHB	3	160	**35150.0110**	1	N 3	0,056	0,003	111,80
NH-SI 3 200A TF AC1000V RHB	3	200	**35150.0120**	1	N 3	0,083	0,003	114,90
NH-SI 3 224A TF AC1000V RHB	3	224	**35150.0130**	1	N 3	0,083	0,003	114,90
NH-SI 3 250A TF AC1000V RHB	3	250	**35150.0140**	1	N 3	0,083	0,003	114,90
NH-SI 3 300A TF AC1000V RHB	3	300	**35150.0150**	1	N 3	0,012	0,003	120,10
NH-SI 3 315A TF AC1000V RHB	3	315	**35150.0160**	1	N 3	0,012	0,003	123,20
NH-SI 3 355A TF AC1000V RHB	3	355	**35150.0170**	1	N 3	0,012	0,003	123,20
NH-SI 3 400A TF AC1000V RHB	3	400	**35150.0190**	1	N 3	0,012	0,003	123,20
NH-SI 3 425A TF AC1000V RHB	3	425	**35150.0180**	1	N 3	0,012	0,003	123,20

35091.0190

NH Fuse-Links size 3L, Specialdesign

Properties:
- AC 1000 V and 1500 V
- Breaking capacity: 10kA
- TF acc. VDE 0660 and DIN 43620/5
- Striker for fusemonitoring

Description	Size	Amps	Order-No.	PU	PG	Sur. Ag	Sur. Cu	Price €/pc.
NH-SI 3L 10A TF AC1500V SM	3L	10	**35091.0010**	1	N 3	0,012	0,026	147,00
NH-SI 3L 16A TF AC1500V SM	3L	16	**35091.0020**	1	N 3	0,014	0,026	147,00
NH-SI 3L 20A TF AC1500V SM	3L	20	**35091.0030**	1	N 3	0,015	0,026	147,00
NH-SI 3L 25A TF AC1500V SM	3L	25	**35091.0040**	1	N 3	0,017	0,026	147,00
NH-SI 3L 35A TF AC1500V SM	3L	35	**35091.0050**	1	N 3	0,017	0,026	147,00
NH-SI 3L 50A TF AC1500V SM	3L	50	**35091.0060**	1	N 3	0,021	0,026	147,00
NH-SI 3L 63A TF AC1500V SM	3L	63	**35091.0070**	1	N 3	0,022	0,026	147,00
NH-SI 3L 80A TF AC1500V SM	3L	80	**35091.0080**	1	N 3	0,028	0,026	147,00
NH-SI 3L 100A TF AC1500V SM	3L	100	**35091.0090**	1	N 3	0,035	0,026	147,00
NH-SI 3L 125A TF AC1500V SM	3L	125	**35091.0100**	1	N 3	0,048	0,026	147,00
NH-SI 3L 160A TF AC1500V SM	3L	160	**35091.0110**	1	N 3	0,069	0,026	153,20
NH-SI 3L 200A TF AC1500V SM	3L	200	**35091.0120**	1	N 3	0,089	0,026	153,20
NH-SI 3L 224A TF AC1500V SM	3L	224	**35091.0130**	1	N 3	0,099	0,026	155,30
NH-SI 3L 250A TF AC1500V SM	3L	250	**35091.0140**	1	N 3	0,110	0,026	155,30
NH-SI 3L 300A TF AC1500V SM	3L	300	**35091.0150**	1	N 3	0,130	0,026	164,60
NH-SI 3L 315A TF AC1500V SM	3L	315	**35091.0160**	1	N 3	0,140	0,026	164,60
NH-SI 3L 355A TF AC1500V SM	3L	355	**35091.0170**	1	N 3	0,150	0,026	164,60
NH-SI 3L 425A TF AC1000V SM	3L	425	**35091.0180**	1	N 3	0,198	0,026	168,70
NH-SI 3L 500A TF AC1000V SM	3L	500	**35091.0190**	1	N 3	0,217	0,026	222,50

NH Fuse-Links 1000 V / 1500 V TF

For more information
see page **40**

35089.0190

NH Fuse-Links size 3L, Specialdesign

Properties:
- AC 1000 V and 1500 V
- Breaking capacity: 10kA
- TF acc. VDE 0660 and DIN 43620/5

Description	Size	Amps	Order-No.	PU	PG	Sur. Ag	Sur. Cu	Price €/pc.
NH-SI 3L 6A TF AC1500V LS	3L	6	**35089.0200**	1	N 3	0,011	0,026	100,40
NH-SI 3L 10A TF AC1500V LS	3L	10	**35089.0010**	1	N 3	0,012	0,026	99,40
NH-SI 3L 16A TF AC1500V LS	3L	16	**35089.0020**	1	N 3	0,014	0,026	99,40
NH-SI 3L 20A TF AC1500V LS	3L	20	**35089.0030**	1	N 3	0,015	0,026	99,40
NH-SI 3L 25A TF AC1500V LS	3L	25	**35089.0040**	1	N 3	0,017	0,026	99,40
NH-SI 3L 35A TF AC1500V LS	3L	35	**35089.0050**	1	N 3	0,017	0,026	99,40
NH-SI 3L 50A TF AC1500V LS	3L	50	**35089.0060**	1	N 3	0,021	0,026	99,40
NH-SI 3L 63A TF AC1500V LS	3L	63	**35089.0070**	1	N 3	0,022	0,026	99,40
NH-SI 3L 80A TF AC1500V LS	3L	80	**35089.0080**	1	N 3	0,028	0,026	99,40
NH-SI 3L 100A TF AC1500V LS	3L	100	**35089.0090**	1	N 3	0,035	0,026	99,40
NH-SI 3L 125A TF AC1500V LS	3L	125	**35089.0100**	1	N 3	0,048	0,026	99,40
NH-SI 3L 160A TF AC1500V LS	3L	160	**35089.0110**	1	N 3	0,069	0,026	106,60
NH-SI 3L 200A TF AC1500V LS	3L	200	**35089.0120**	1	N 3	0,089	0,026	106,60
NH-SI 3L 224A TF AC1500V LS	3L	224	**35089.0130**	1	N 3	0,099	0,026	109,70
NH-SI 3L 250A TF AC1500V LS	3L	250	**35089.0140**	1	N 3	0,110	0,026	109,70
NH-SI 3L 300A TF AC1500V LS	3L	300	**35089.0150**	1	N 3	0,130	0,026	118,00
NH-SI 3L 315A TF AC1500V LS	3L	315	**35089.0160**	1	N 3	0,014	0,026	118,00
NH-SI 3L 355A TF AC1500V LS	3L	355	**35089.0170**	1	N 3	0,150	0,026	118,00
NH-SI 3L 425A TF AC1000V LS	3L	425	**35089.0180**	1	N 3	0,198	0,026	122,10
NH-SI 3L 500A TF AC1000V LS	3L	500	**35089.0190**	1	N 3	0,217	0,026	176,00

NH Fuse-Links AC 400 V gG

Technical data

New trends in energy distribution are showing higher energy density. More and more components (Fuse-Switches, Fuse-Bases) are installed in smaller cabinets. Cabinets have a limited power acceptance and the space for installation is an important part of the total costs. The main application in energy distribution grids is the 230/400 V voltage rage.

EFEN 400 V fuses with lower power dissipation are perfectly fitting to the needs of the actual applications and are also saving energy. The twin Indicator guaranties clear visibility of the fuse status in different installations.

- Energy saving construction with 400 V melting element
- Reduced power dissipation and temperature rise
- Twin Indicator assures optimal visibility in different applications

Comparison of power dissipation 400 V and 500 V NH Fuse-Link

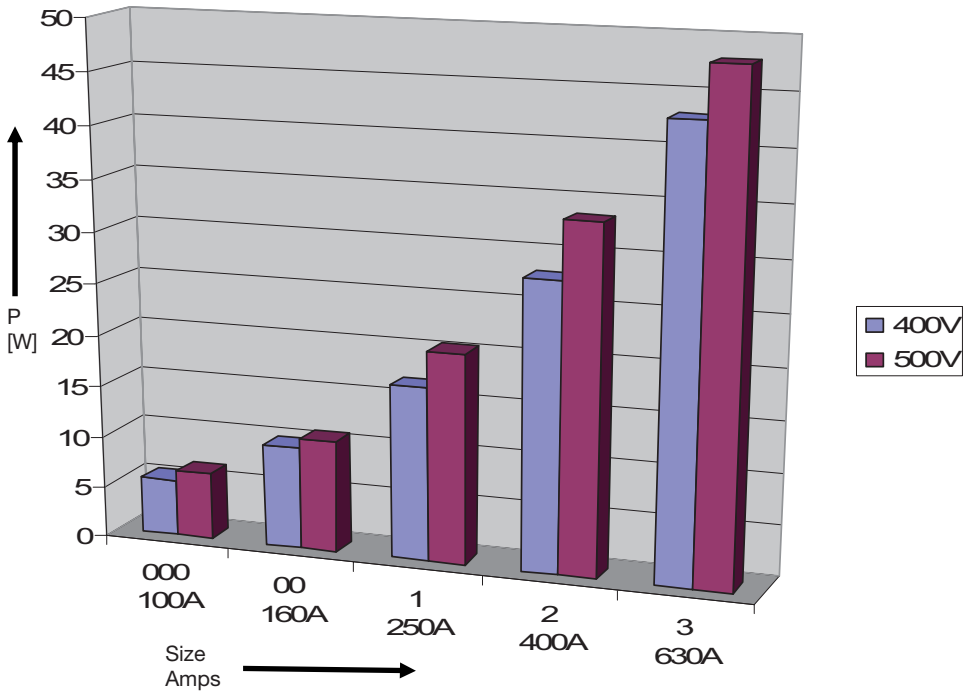

Saved Energy per year and fuse-link*

Size current	E [kWh]
NH 000 100A	2,6
NH 00 160A	2,9
NH 1 250A	9,2
NH 2 400A	14,5
NH 3 630A	13,1

* 80% I_n / ½time

Technical adaptations possible

NH Fuse-Links AC 400 V gG

Size	Amps	Live metal gripping lugs Order no.	Dead metal gripping lugs Order no.	Pack
000	2	35401.0020	35406.0020	3
000	4	35401.0040	35406.0040	3
000	6	35401.0060	35406.0060	3
000	10	35401.0100	35406.0100	3
000	16	35401.0160	35406.0160	9
000	20	35401.0200	35406.0200	9
000	25	35401.0250	35406.0250	9
000	32	35401.0320	35406.0320	9
000	35	35401.0350	35406.0350	9
000	40	35401.0400	35406.0400	9
000	50	35401.0500	35406.0500	9
000	63	35401.0630	35406.0630	9
000	80	35401.0800	35406.0800	9
000	100	35401.1000	35406.1000	9
00	125	35402.1250	35407.1250	3
00	160	35402.1600	35407.1600	3
1	16	35403.0160	35408.0160	3
1	20	35403.0200	35408.0200	3
1	25	35403.0250	35408.0250	3
1	32	35403.0320	35408.0320	3
1	35	35403.0350	35408.0350	3
1	40	35403.0400	35408.0400	3
1	50	35403.0500	35408.0500	3
1	63	35403.0630	35408.0630	3
1	80	35403.0800	35408.0800	3
1	100	35403.1000	35408.1000	3
1	125	35403.1250	35408.1250	3
1	160	35403.1600	35408.1600	3
1	200	35403.2000	35408.2000	3
1	224	35403.2240	35408.2240	3
1	250	35403.2500	35408.2500	3
2	35	35404.0350	35409.0350	3
2	50	35404.0500	35409.0500	3
2	63	35404.0630	35409.0630	3
2	80	35404.0800	35409.0800	3
2	100	35404.1000	35409.1000	3
2	125	35404.1250	35409.1250	3
2	160	35404.1600	35409.1600	3
2	200	35404.2000	35409.2000	3
2	224	35404.2240	35409.2240	3
2	250	35404.2500	35409.2500	3
2	300	35404.3000	35409.3000	3
2	315	35404.3150	35409.3150	3
2	355	35404.3550	35409.3550	3
2	400	35404.4000	35409.4000	3
3	250	35405.2500	35410.2500	1
3	300	35405.3000	35410.3000	1
3	315	35405.3150	35410.3150	1
3	400	35405.4000	35410.4000	1
3	425	35405.4250	35410.4250	1
3	500	35405.5000	35410.5000	1
3	630	35405.6300	35410.6300	1

NH Fuse-Links AC 500 V gG

Technical data

Dimensons DIN 436201

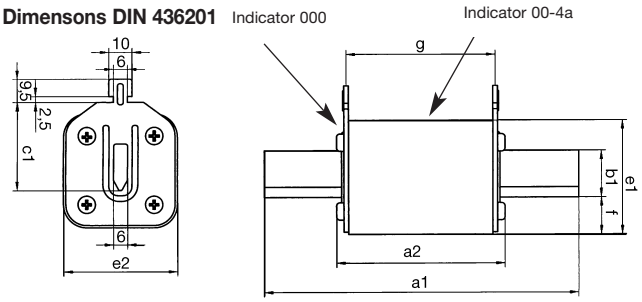

Size	Rated current	a_1	a_2	b_1	c_1	e_1	e_2	g
000		78,5	53	15	35	37	21	47
00	up to 160 A	78,5	53	15	35	45	30	47
1	up to 160 A	135	70	15	40	45	30	65
1	200-250 A	135	70	20	40	50	50	65
2	up to 250 A	150	71	20	48	50	50	65
2	300-400 A	150	71	26	48	58	58	65
3	up to 400 A	150	71	26	60	58	58	65
3	500-630 A	150	71	32	60	68	68	65
4a		200	96	50	85	109	98	86

For cable and line protection
Rated voltage: AC 500 V/DC 440 V*
Utilization category: gG acc. VDE 0636-2 + VDE 0636-1
IEC 60 269-1 IEC 60 269-2
Application: for cable and line protection
Breaking capacity: 120 kA (AC 500 V) /25 kA (DC 440 V)
*Size 00 DC 220V

Electrical characteristics:
The time-current characteristics are matched to the line and cable capacities. The line to be protected can operate at optimal load since breaking in the overload range is slow and quick in case of a short circuit current.
The time-current zones acc. to IEC 60 269 guarantee selectivity between Fuse-Links of different manufacturers made acc. to this standard. Selective short-circuit interrruption is given at rated currents $I_N \geq 16$ A having rated current rations of 1:1,6.

Size	Amps	Live metal gripping lugs Order no.	Amps	Dead gripping lugs of special polymer Order no.	Amps	Dead metal gripping lugs Order no.	Pack
000	2	35000.0020	2	35001.0020			10
000	4	35000.0040	4	35001.0040			10
000	6	35000.0060	6	35001.0060			10
000	10	35000.0100	10	35001.0100			10
000	16	35000.0160	16	35001.0160			10
000	20	35000.0200	20	35001.0200			10
000	25	35000.0250	25	35001.0250			10
000	32	35000.0320	32	35001.0320			10
000	35	35000.0350	35	35001.0350			10
000	40	35000.0400	40	35001.0400			10
000	50	35000.0500	50	35001.0500			10
000	63	35000.0630	63	35001.0630			10
000	80	35000.0800	80	35001.0800			10
000	100	35000.1000	100	35001.1000			10
00	2	35011.0010			2	35165.0010	3
00	4	35011.0020			4	35165.0020	3
00	6	35011.0030			6	35165.0030	3
00	10	35011.0040			10	35165.0040	3
00	16	35011.0050			16	35165.0050	3
00	20	35011.0060			20	35165.0060	3
00	25	35011.0070			25	35165.0070	3
00	32	35011.0080			32	35165.0080	3
00	35	35011.0090			35	35165.0090	3
00	40	35011.0100			40	35165.0100	3
00	50	35011.0110			50	35165.0110	3
00	63	35011.0120			63	35165.0120	3
00	80	35011.0130			80	35165.0130	3
00	100	35011.0140			100	35165.0140	3
00	125	35011.0150			125	35165.0150	3
00	160	35011.1090			160	35165.0160	3
1	25	35035.0050			25	35204.0050	3
1	32	35035.1220			32	35204.0160	3
1	35	35035.0060			35	35204.0060	3
1	40	35035.1230			40	35204.0170	3
1	50	35035.0070			50	35204.0070	3
1	63	35035.0080			63	35204.0080	3
1	80	35035.0090			80	35204.0090	3
1	100	35035.0100			100	35204.0110	3
1	125	35035.0110			125	35204.0110	3
1	160	35035.0120			160	35204.0120	3
1	200	35035.0130			200	35204.0130	3
1	224	35035.0140			224	35204.0140	3
1	250	35035.0150			250	35204.0150	3

Technical adaptations possible

NH Fuse-Links AC 500 V gG

Size	Amps	Live metal gripping lugs Order no.	Amps	Dead gripping lugs of special polymer Order no.	Pack
2	25	35054.0010			3
2	35	35054.0020			3
2	50	35054.0030			3
2	63	35054.0040	63	35116.0040	3
2	80	35054.0050	80	35116.0050	3
2	100	35054.0060	100	35116.0060	3
2	125	35054.0070	125	35116.0070	3
2	160	35054.0080	160	35116.0080	3
2	200	35054.0090	200	35116.0090	3
2	224	35054.0100	224	35116.0100	3
2	250	35054.0110	250	35116.0110	3
2	(300)	35054.0120	(300)	35116.0120	3
2	315	35054.0130	315	35116.0130	3
2	(355)	35054.0140	(355)	35116.0140	3
2	400	35054.0150	400	35116.0150	3
3	63	35078.0340			3
3	80	35078.0350			3
3	100	35078.0360			3
3	125	35078.0370			3
3	160	35078.0380			3
3	200	35078.0390			3
3	224	35078.0400			3
3	250	35078.0410			3
3	(300)	35078.0190			3
3	315	35078.0010			3
3	(355)	35078.0020			3
3	400	35078.0030			3
3	(425)	35078.0040			3
3	500	35078.0050			3
3	630	35078.0060			3
4a	400	35097.0120			1
4a	500	35097.0010			1
4a	630	35097.0020			1
4a	800	35097.0030			1
4a	1000	35097.0040			1
4a	1250	35097.0050			1
4a	1600	35097.0110			1

( ) = Dimensions according DIN, rating not standardized in VDE 0636.

Force - Distance-Diagram of the striker

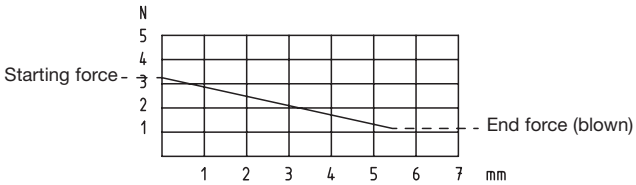

NH Fuse-Links size 00 with striker pin
EFEN NH Fuse-Links size 00 with striker pin can be used for fuse monitoring, tripping on micro switch.

NH Fuse-Links for cable and line protection size 00, 500V AC, category gL, with striker pin

Amps	Order no.	Description
6	**35207.0010**	NH-Si 00 6A gL SM
10	**35207.0020**	NH-Si 00 10A gL SM
16	**35207.0030**	NH-Si 00 16A gL SM
20	**35207.0040**	NH-Si 00 20A gL SM
25	**35207.0050**	NH-Si 00 25A gL SM
32	**35207.0060**	NH-Si 00 32A gL SM
35	**35207.0070**	NH-Si 00 35A gL SM
40	**35207.0080**	NH-Si 00 40A gL SM
50	**35207.0090**	NH-Si 00 50A gL SM
63	**35207.0100**	NH-Si 00 63A gL SM
80	**35207.0110**	NH-Si 00 80A gL SM
100	**35207.0120**	NH-Si 00 100A gL SM
125	**35207.0130**	NH-Si 00 125A gL SM

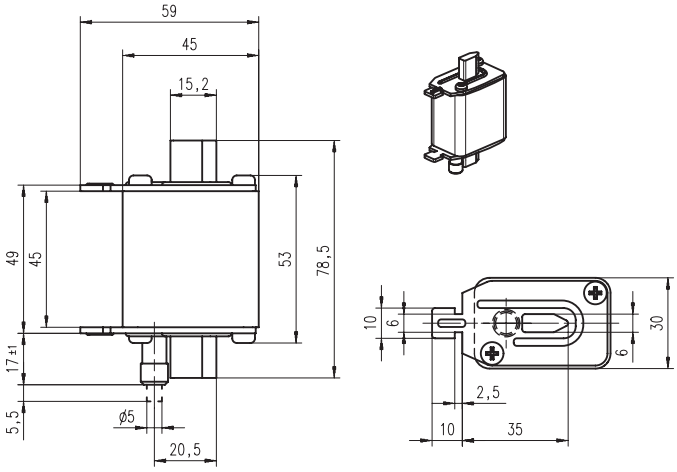

For cable and line protection

Time-current characteristics

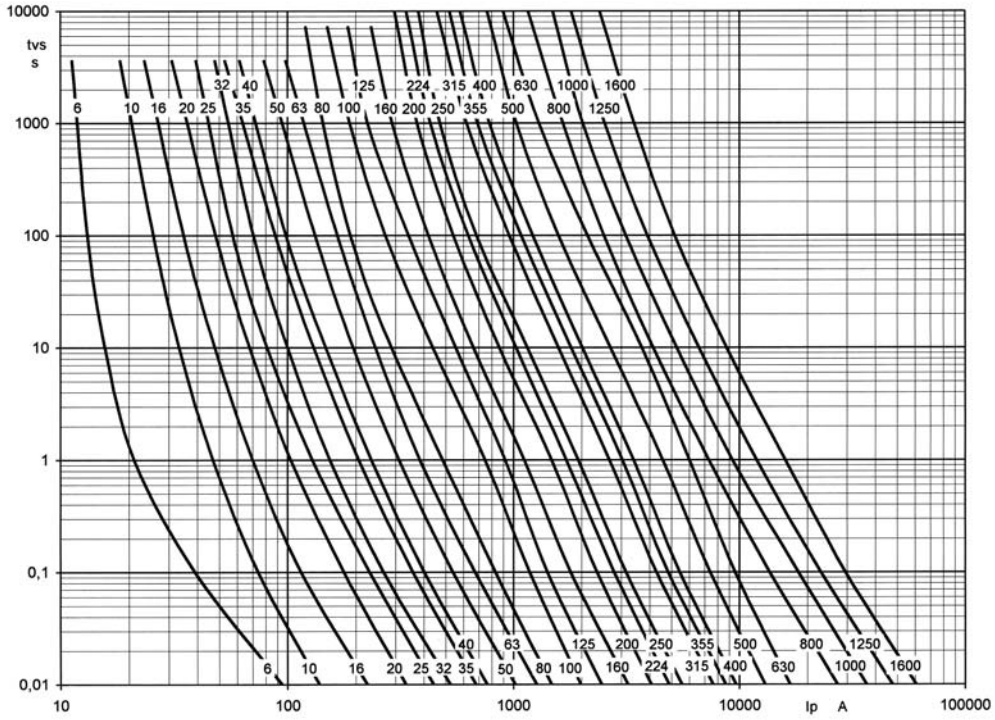

Cut-off current characteristics

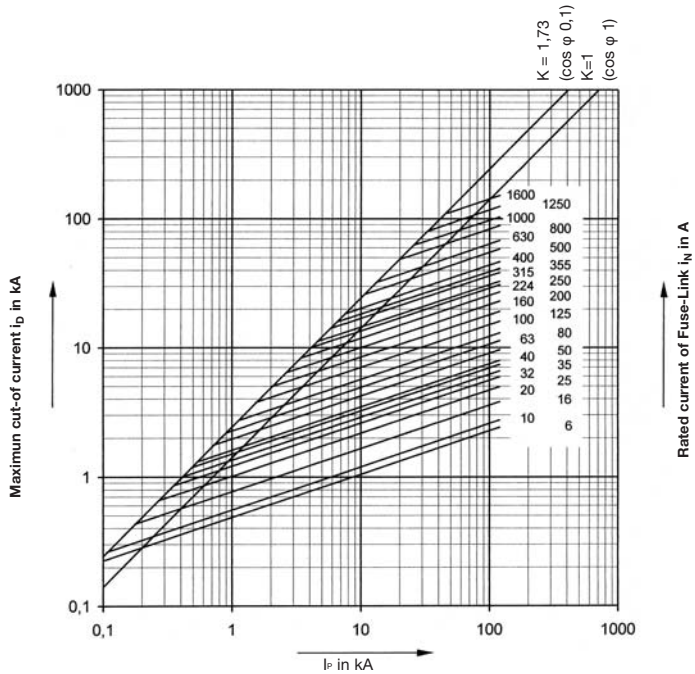

Prospective Short-Circuit Current symmetrical RMS

For cable and line protection

Power dissipation in W

I_n	Size					
A	000	00	1	2	3	4a
6	1,4	1,4				
10	1,6	1,1				
16	2,1	1,7				
20	2,2	1,8				
25	2,4	2,2	2,9	2,8		
32	3,6	3,2	4,5	4,3		
35	3,7	2,9	3,9	3,8		
40	3,9	3,5	5,1	4,9		
50	4,5	3,5	4,5	4,3		
63	5,5	4,6	6,1	5,9	5,9	
80	5,5	5,5	6,9	6,7	6,7	
100	6,5	6,8	8,5	8,2	8,1	
125		7,8	9,6	9,3	9,2	

I_n	Size					
A	000	00	1	2	3	4a
160		10,9	12,8	12,5	12,4	
200			15,9	15,9	15,8	
224			18,4	18,4	18,2	
250			20,4	20,4	20,2	
315				25,0	25,0	
355				29,5	29,5	
400				33,5	33,5	31,2
500					40,6	36,5
630					44,0	44,4
800						68,0
1000						72,9
1250						100,5
1600						126,2

Pre-arcing and operating integrals acc. VDE/IEC in A^2s

	Size											
I_n	000		00		1		2		3		4a	
A	I	II	I	II	I	II	I	II	I	II	I	II
6	72	120										
10	220	360	130	300								
16	330	530	360	820								
20	720	1250	810	1830								
25	1440	2150	1370	3100								
32	2030	3240	1823	4150								
35	2930	4750	2560	5800								
40	3840	6300	3240	7350								
50	5900	9390	5760	13000								
63	9500	14980	9000	21000	9000	21000						
80	14600	23600	14440	33000	14400	33000						
100	23250	36650	27040	61000	27040	61000						
125			46240	105000	46240	105000						
160			77440	175000	77440	175000						
200					122990	278000	122990	278000				
224					184960	418000	184960	418000				
250					231040	521000	231040	521000				
315							368640	831000	368640	831000		
355							466560	$1052\ 10^3$	466560	$1052\ 10^3$		
400							655360	$1476\ 10^3$	655360	$1476\ 10^3$	610500	927000
500									$1296\ 10^3$	$2920\ 10^3$	$1025\ 10^3$	$1618\ 10^3$
630									$1950\ 10^3$	$4400\ 10^3$	$1767\ 10^3$	$2600\ 10^3$
800											$3499\ 10^3$	$5449\ 10^3$
1000											$5878\ 10^3$	$8708\ 10^3$
1250											$12164\ 10^3$	$18676\ 10^3$
1600											$20347\ 10^3$	$31278\ 10^3$

I = Pre-arcing integrals
II = Operating integrals

NH Fuse-Links AC 500 V gL

Technical data

For cable and line protection in meshed networks
(Resistant to aging)
Rated voltage: AC 500 V
Utilization category: gL - gG acc. VDE 0636/21
IEC 269-2
Application: for cable and line protection
Breaking capacity: 120 kA (Gr. 00-2)

Electrical characteristics
The time-current characteristics are matched to the line and cable capacities. The lines to be protected can operate at optimal load since breaking in the overload range is slow and quick in case of a short circuit current.

The time-current zones acc. to IEC 269-2 guarantee selectivity between Fuse-Links of different manufacturers made acc. to this standard. Selective short-circuit interruption is given at rated current $I_N \geq 16$ A having rated current ratios of 1:1,6. EFEN-500 V-Fuse-Links, when used in 400 V-AC-systems match a discrimination ratio of 1:1,25, i.e. discrimination between all Fuse-Links having different rated current.
EFEN Pure silver fuse-elements are specifically suited for use in meshed distribution systems. Fuse-links rated at 500 V show a discrimination factor of 0,79 when used in 400 V-systems, i.e. if the maximum partial current does not exceed 79 % of the total short-circuit current the fuse-link closest to the failure only will operate. Due to aging resistant pure silver fuse elements a proper discrimination is ensured over a long life-time.

Remark: Standard blown fuse indicators do not necessarily work at low differential voltage as given in mashed systems.
Please ask for special EFEN-solution.

Dimensions: DIN 43620/1

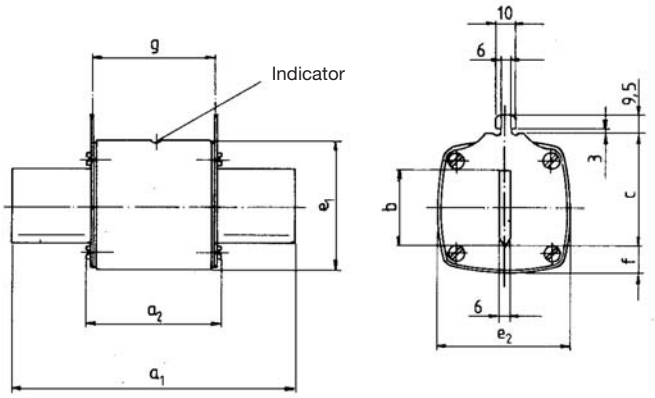

Size	a_1	a_2	b	c	e_1	e_2	f	g
00[1]	78,5	53	15	35	40	28	12,5	47
0	125	67	15	35	38	35	11,5	65
1[2]	135	74	20	40	38	35	9	65
1[3]	135	74	24,5	40	45	45	10	65
2[4]	150	74	25	48	45	45	10	65
2[5]	150	72	30	48	59	59	14,5	65
3[6]	150	72	40	60	70	70	15	65

[1] Rated current up to 160 A
[2] Rated current up to 125 A
[3] Rated current 160-250 A
[4] Rated current up to 250 A
[5] Rated current 300-400 A
[6] Rated current up to 630 A

Technical adaptations possible

N

Time-current characteristics

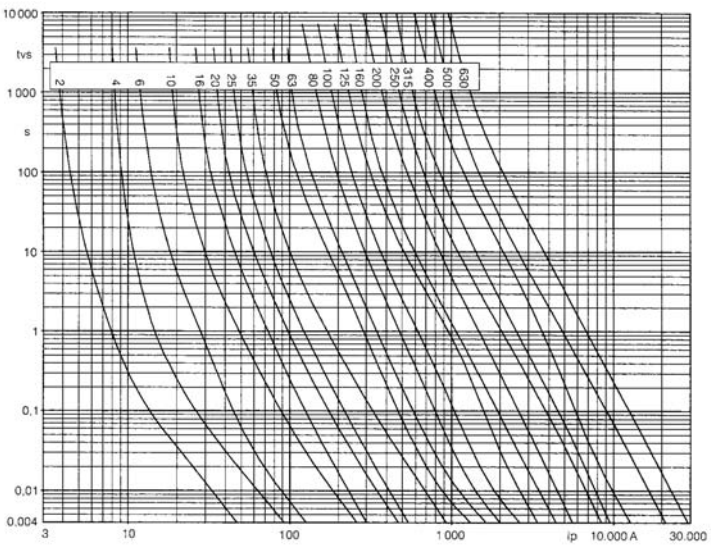

Cut-offcurrent characteristics

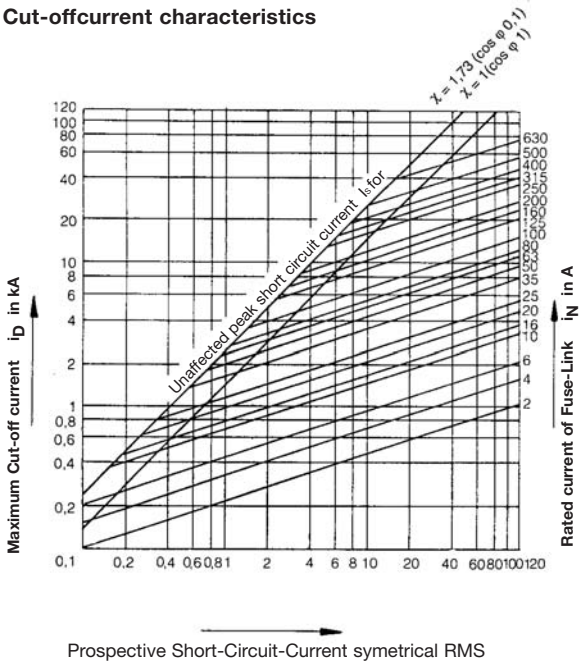

Prospective Short-Circuit-Current symetrical RMS

Power dissipation in W

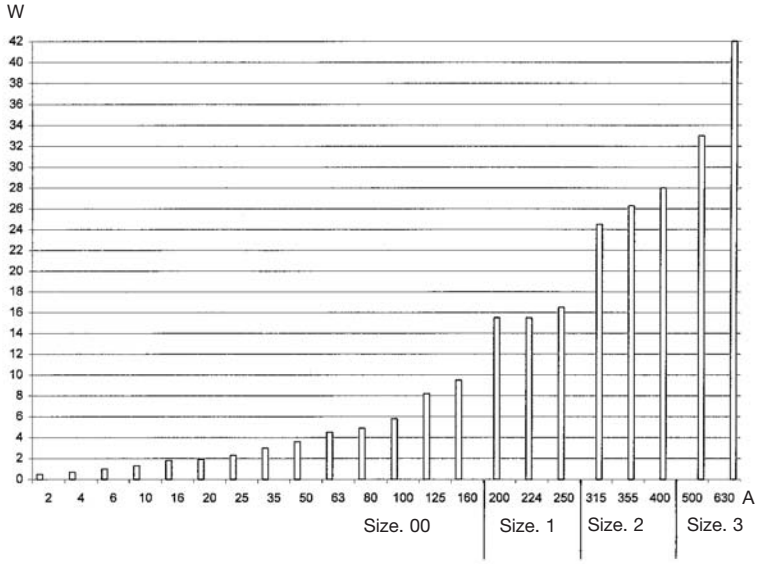

Pre-arcing and operating integrals

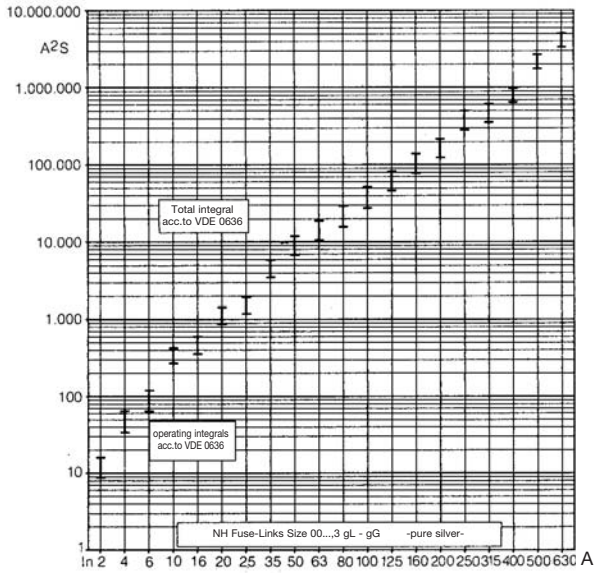

NH Fuse-Links AC 690 V gG

Technical data

For cable and line protection
Rated voltage: AC 690 V
Utilization category: gG acc. VDE 0636-2 + VDE 0636-1
IEC 60 269-2 IEC 60 269-1
Application: for cable and line protection
Breaking capacity: 100 kA (630 A 50 kA)

Electrical characteristics:
The time-current characteristics are matched to the line and cable capacities. The lines to be protected can operate at optimal load since breaking in the overload range is slow and quick in case of a short circuit current.

Size	Amps	metal gripping lugs Order no.	Pack
00	2	35027.0220	10
00	4	35027.0230	10
00	6	35027.0010	10
00	10	35027.0020	10
00	16	35027.0030	10
00	20	35027.0040	10
00	25	35027.0050	10
00	32	35027.0060	10
00	35	35027.0070	10
00	40	35027.0080	10
00	50	35027.0090	10
00	63	35027.0100	10
00	80	35027.0110	10
00	100	35027.0120	10
1	25	35052.1030	3
1	32	35052.1040	3
1	35	35052.1050	3
1	40	35052.1060	3
1	50	35052.1070	3
1	63	35052.1080	3
1	80	35052.1090	3
1	100	35052.1100	3
1	125	35052.1110	3
1	160	35052.1120	3
1	200	35052.1130	3
1	(250)	35052.1140	3
2	25	35124.1230	3
2	35	35124.1010	3
2	50	35124.1020	3
2	63	35124.1030	3
2	80	35124.1040	3
2	100	35124.1050	3
2	125	35124.1060	3
2	160	35124.1070	3
2	200	35124.1080	3
2	250	35124.1090	3
2	315	35124.1100	3
2	(355)	35124.1110	3
2	(400)	35124.1220	3
3	63	35135.1080	3
3	80	35135.1090	3
3	100	35135.1100	3
3	125	35135.1110	3
3	160	35135.1120	3
3	200	35135.1070	3
3	224	35135.1130	3
3	250	35135.1040	3
3	315	35135.1050	3
3	(355)	35135.1060	3
3	400	35135.1020	3
3	500	35135.1010	3
3	(630)	35135.1140	3

Dimensions: DIN 43620/1

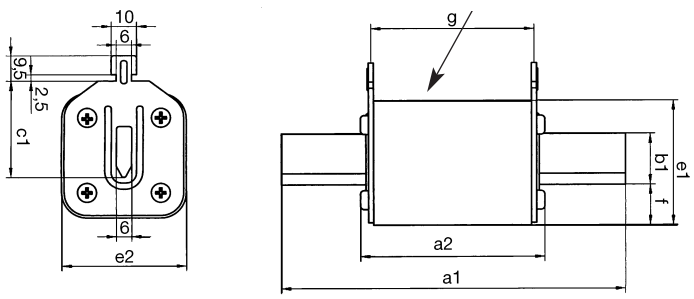

Size	Rated current	a_1	a_2	b_1	c_1	e_1	e_2	g
000	6-63 A	78,5	53	15	35	37	21	47
00	80-100 A	78,5	53	15	35	45	30	47
1	25-160 A	135	70	15	40	45	30	65
1	200-250 A	135	70	20	40	50	50	65
2	25-250 A	150	71	20	48	50	50	65
2	315-400 A	150	71	26	48	58	58	65
3	63-400 A	150	71	26	60	58	58	65
3	500 A, 630 A	150	74	32	60	71	71	65

( ) = Dimensions according DIN, rating not standardized in VDE 0636.

N

For cable and line protection

Time-current characteristics

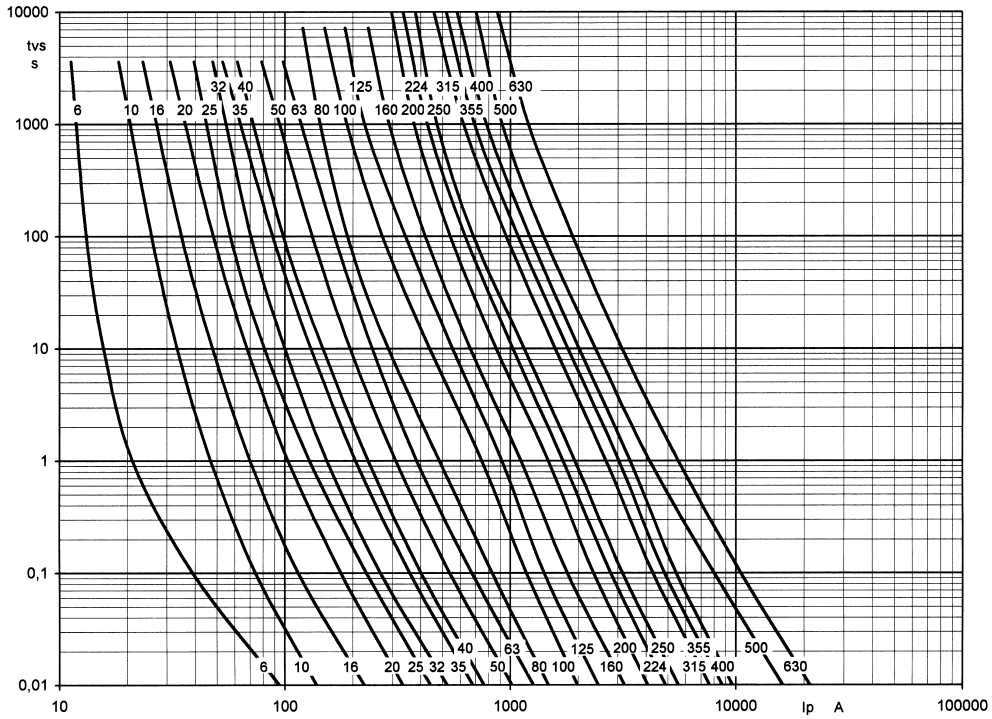

Cut-off current characteristics

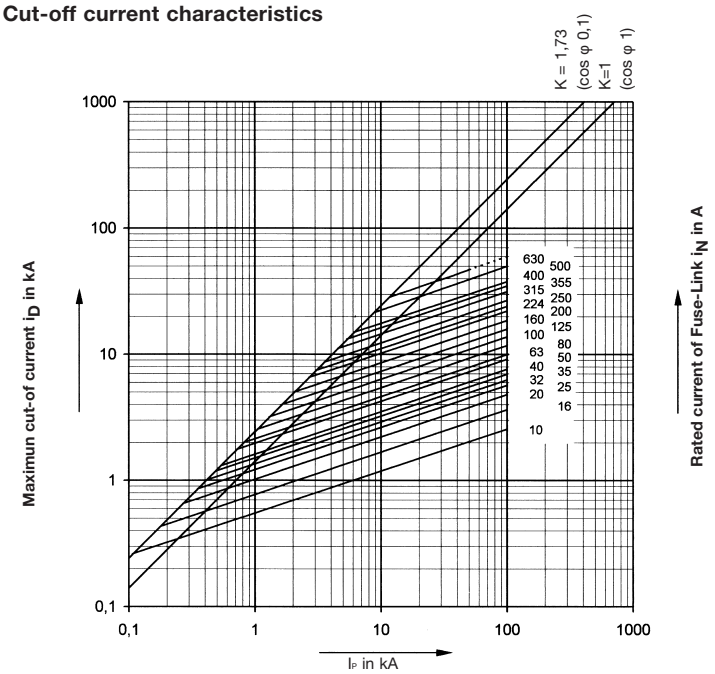

Prospective Short-Circuit Current symmetrical RMS

NH Fuse-Links AC 400 V gTr

Technical data

For transformer protection
Rated voltage: AC 400 V
Utilization category: gTr acc. VDE 0636/2011
Application: for transformer protection
Breaking capacity: 100 kA

Size	Amps	kVA	metal gripping lugs Order no.	Pack
2	(72)	50	35076.1010	3
2	(108)	75	35076.1020	3
2	(144)	100	35076.1030	3
2	(180)	125	35076.1040	3
2	(231)	160	35076.1050	3
2	(289)	200	35076.1060	3
2	(361)	250	35076.1070	3
3	(144)	100	35081.1040	1
3	(231)	160	35081.1060	1
3	(289)	200	35081.1050	1
3	(361)	250	35081.1010	1
3	(455)	315	35081.1020	1
3	(577)	400	35081.1030	1
3	(722)	500	35081.0100	1
3	(909)	630	35081.0110	1
4a	(144)	100	35100.0100	1
4a	(231)	160	35100.0110	1
4a	(289)	200	35100.0160	1
4a	(361)	250	35100.0120	1
4a	(455)	315	35100.0170	1
4a	(577)	400	35100.0130	1
4a	(722)	500	35100.0140	1
4a	(909)	630	35100.0150	1
4a	(1155)	800	35100.0040	1
4a	(1443)	1000	35100.0190	1

( ) = Dimensions according DIN, rating not standardized in VDE 0636.

Electrical characteristics:
The time-current characteristics are adapted to the thermal capacity of the transformer and the time-current characteristics of the high-voltage Fuse-Links. Therefore a better utilization of the overload capacity of transformers. EFEN transformer Fuse-Links are able to carry 1,3-times current rated of a transformer as continuous load for a minimum of 10 hrs. Fuse operates within 2 hrs at 1,5-times rated current of the transformer.

Dimensions: DIN 43620/1

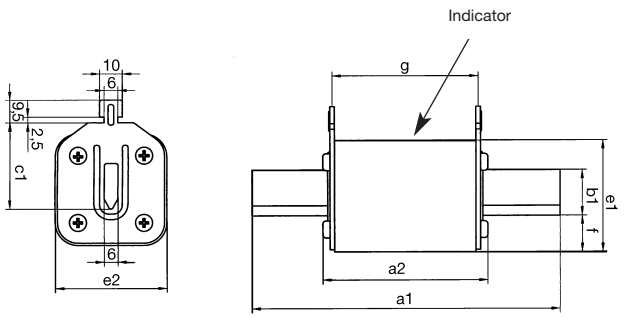

Size	a_1	a_2	b	c	e_1	e_2	f	g
2	150	72	26	48	60	53	14	65
3	150	72	32	60	70	65	14	65
3[1)]	150	74	32	60	71	71	14	65
4a	200	98	50	85	110	102	28	87

[1)] 500 kVA and 630 kVa

N

For transformer protection

Time-current characteristics

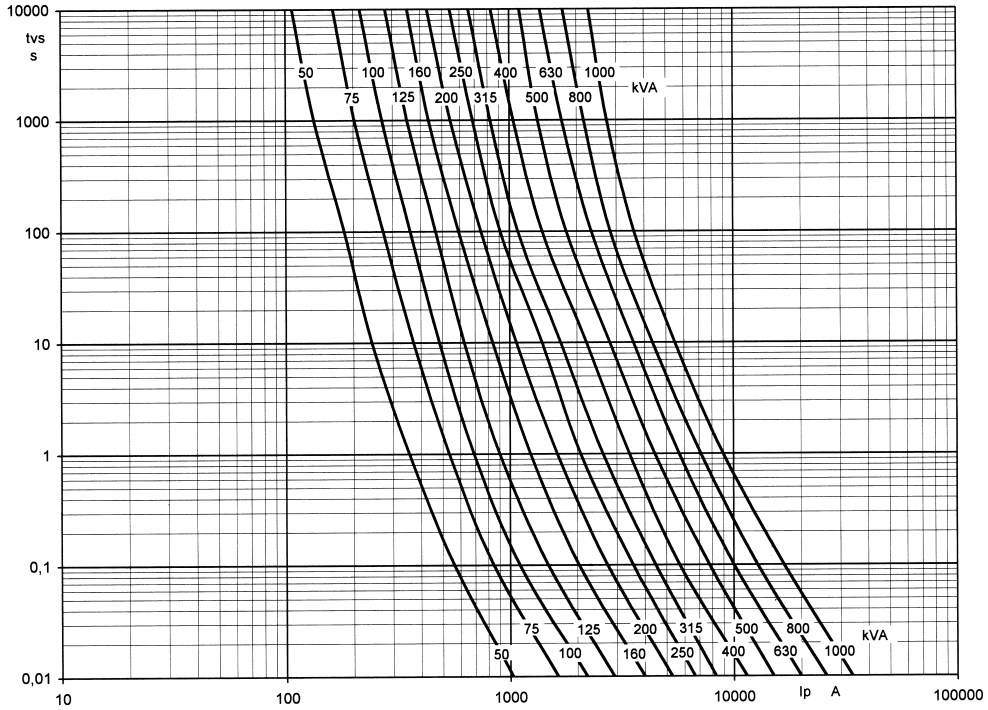

Cut-off current characteristics

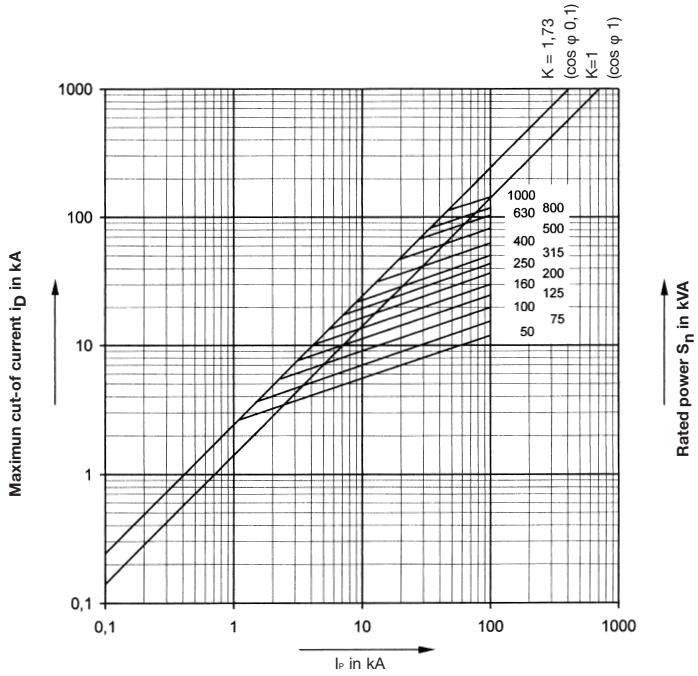

Prospective Short-Circuit Current symmetrical RMS

NH Fuse-Links AC 500 V gR

Technical data

For protection of semiconductors – Pure silver fuse element
Rated voltage: AC 500 V
Utilization category: gR acc. VDE 0636-4
Application: for protection of semiconductors
Breaking capacity: 120 kA

without striker

Size	Amps	metal gripping lugs Order no.	Pack
00	16	35024.0180	10
00	20	35024.0170	10
00	25	35024.0190	10
00	35	35024.0010	10
00	40	35024.0020	10
00	50	35024.0030	10
00	63	35024.0040	10
00	80	35024.0050	10
00	100	35024.0060	10
00	125	35024.0070	10
00	160	35024.0080	10
1	35	35040.0010	3
1	50	35040.0020	3
1	63	35040.0030	3
1	80	35040.0040	3
1	100	35040.0050	3
1	125	35040.0060	3
1	160	35040.0070	3
1	200	35040.0080	3
1	(224)	35040.0090	3
1	250	35040.0100	3
2	80	35058.0010	3
2	100	35058.0020	3
2	125	35058.0030	3
2	160	35058.0040	3
2	200	35058.0050	3
2	(224)	35058.0060	3
2	250	35058.0070	3
2	(300)	35058.0080	3
2	315	35058.0090	3
2	(355)	35058.0100	3
2	400	35058.0110	3
3	315	35079.0010	1
3	(355)	35079.0020	1
3	400	35079.0030	1
3	(425)	35079.0040	1
3	500	35079.0050	1
3	630	35079.0060	1

( ) = Dimensions according DIN, rating not standardized in VDE 0636.

Dimensions: DIN 43620/1

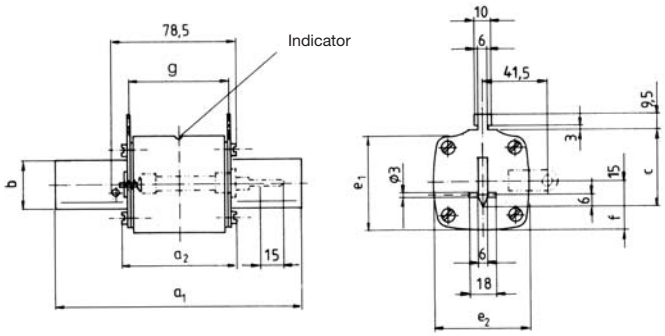

Electrical characteristics:
EFEN-NH-Fuse-Links for the protection of semiconductors have the following specific properties:
1. a super fast acting time-current characteristic
2. low arcing voltage
EFEN-gR-Fuse-Links offer full-range protection. They may be used as full-range fuses for overload and short circuit-protection or in connection with other overcurrent protective devices as short-circuit protection only.

Version with striker:
Parallel to the Fuse-Links a spring-loaded striker pin is mounted. After the melting of the NH Fuse element pin is released and operates a micro-switch on the NH Fuse-base.

with striker

Size	Amps	metal gripping lugs Order no.	Pack
00	16	35218.0010	10
00	20	35218.0020	10
00	25	35218.0030	10
00	35	35218.0040	10
00	40	35218.0050	10
00	50	35218.0060	10
00	63	35218.0070	10
00	80	35218.0080	10
00	100	35218.0090	10
00	125	35218.0100	10
1	35	35046.0010	1
1	50	35046.0020	1
1	63	35046.0030	1
1	80	35046.0040	1
1	100	35046.0050	1
1	125	35046.0060	1
1	160	35046.0070	1
1	200	35046.0080	1
1	(224)	35046.0090	1
1	250	35046.0100	1
2	80	35060.0050	1
2	100	35060.0060	1
2	125	35060.0070	1
2	160	35060.0080	1
2	200	35060.0090	1
2	(224)	35060.0100	1
2	250	35060.0110	1
2	(300)	35060.0120	1
2	(315)	35060.0130	1
2	355	35060.0140	1
2	400	35060.0150	1
3	315	35086.0010	1
3	(355)	35086.0020	1
3	400	35086.0030	1
3	(425)	35086.0040	1
3	500	35086.0050	1
3	630	35086.0060	1

Size	a_1	a_2	b	c	e_1	e_2	f	g
00	78,5	53	15	35	40	28	12,5	47
0	125	67	15	35	38	35	11,5	65
1	135	71	24,5	40	45	45	10	65
2	150	72	30	48	59	59	14,5	65
3	150	72	40	60	70	70	15	65

Technical adaptations possible

For protection of semiconductors – Pure silver fuse element

Time-current characteristics

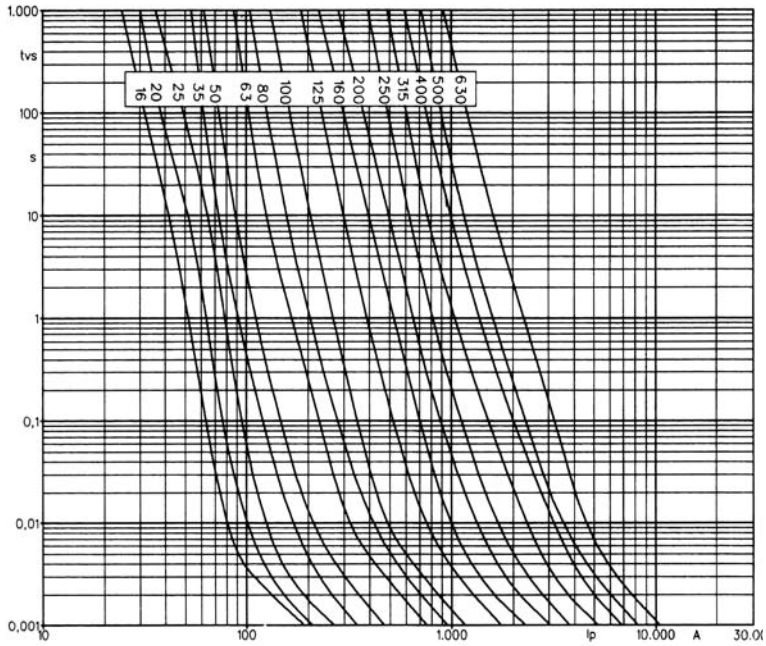

Force - Distance-Diagram of the striker

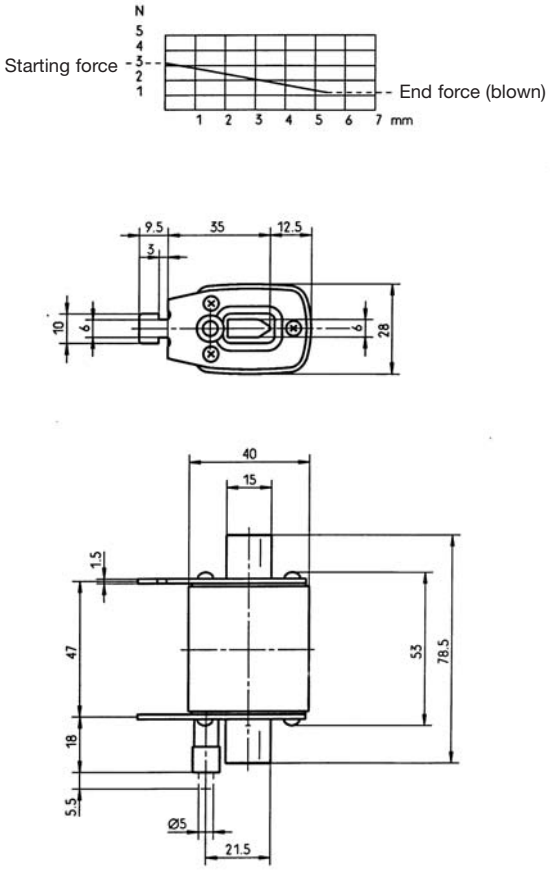

Cut-offcurrent characteristics

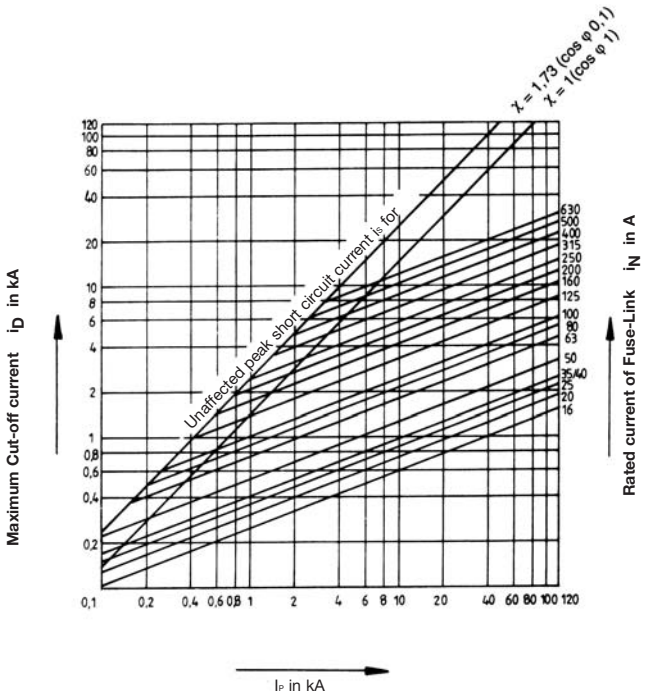

Prospective Short-Circuit Current symmetrical RMS

Pre-arcing and operating integrals

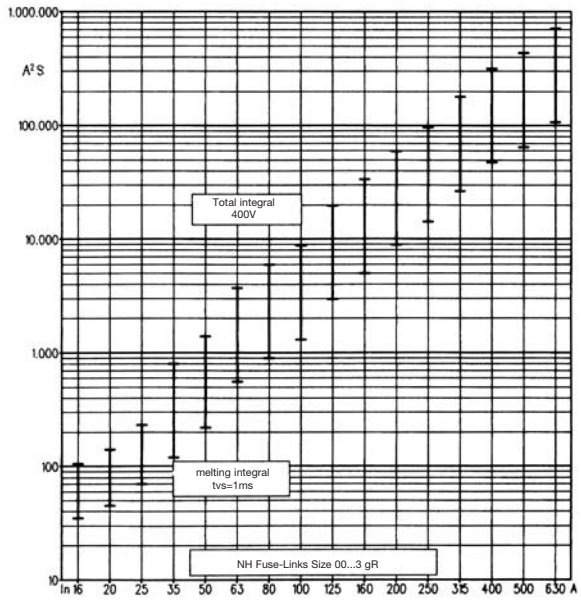

NH Maintenance Fuse-Link

Application:
Instead unsing cable and line protection (gG) Fuse-Links, NH Maintenance Fuse-Links are temporary applied during maintance in an power network.
NH Maintenance Fuse-Links have an ultra rapid time-current characteristic. Thus the max. cut-off current and the cut-off energy is essentially stronger limited then in NH Fuse-Links of the operational classification gG. Thus meaning for the mechanic less hazard potential within appearance of a possible current arc.
For normal operating, these NH Maintenance Fuse-Links are not quite suitable. They release to fast during a temporay overload. Furthermore the power dissipation is clearly higher than that of gG Fuse-Links. In this case we recommend our age resisting Fuse-Links utilization category gG.

- Less hazarded handling for the electrician because of minor cutoff current through a super rapid tripping characteristic
- Dead metal gripping lugs protect against electric shock
- Pure silver fuse element - resistant to aging
- Special prevention against slackening of screws - no problem whatsoever even after many years of application
- Clearly identified as NH Protection Fuse-Link

Size	Order no.	Amps	Description
2	35209.0010	80	NH-Arbeitssicherung 80A gR Li
2	35209.0020	100	NH-Arbeitssicherung 100A gR Li
2	35209.0030	125	NH-Arbeitssicherung 125A gR Li
2	35209.0040	160	NH-Arbeitssicherung 160A gR Li
2	35209.0050	200	NH-Arbeitssicherung 200A gR Li
2	35209.0060	224	NH-Arbeitssicherung 224A gR Li
2	35209.0070	250	NH-Arbeitssicherung 250A gR Li
2	35209.0080	300	NH-Arbeitssicherung 300A gR Li
2	35209.0090	315	NH-Arbeitssicherung 315A gR Li

Comparison Maintenance Fuse-Link / gG

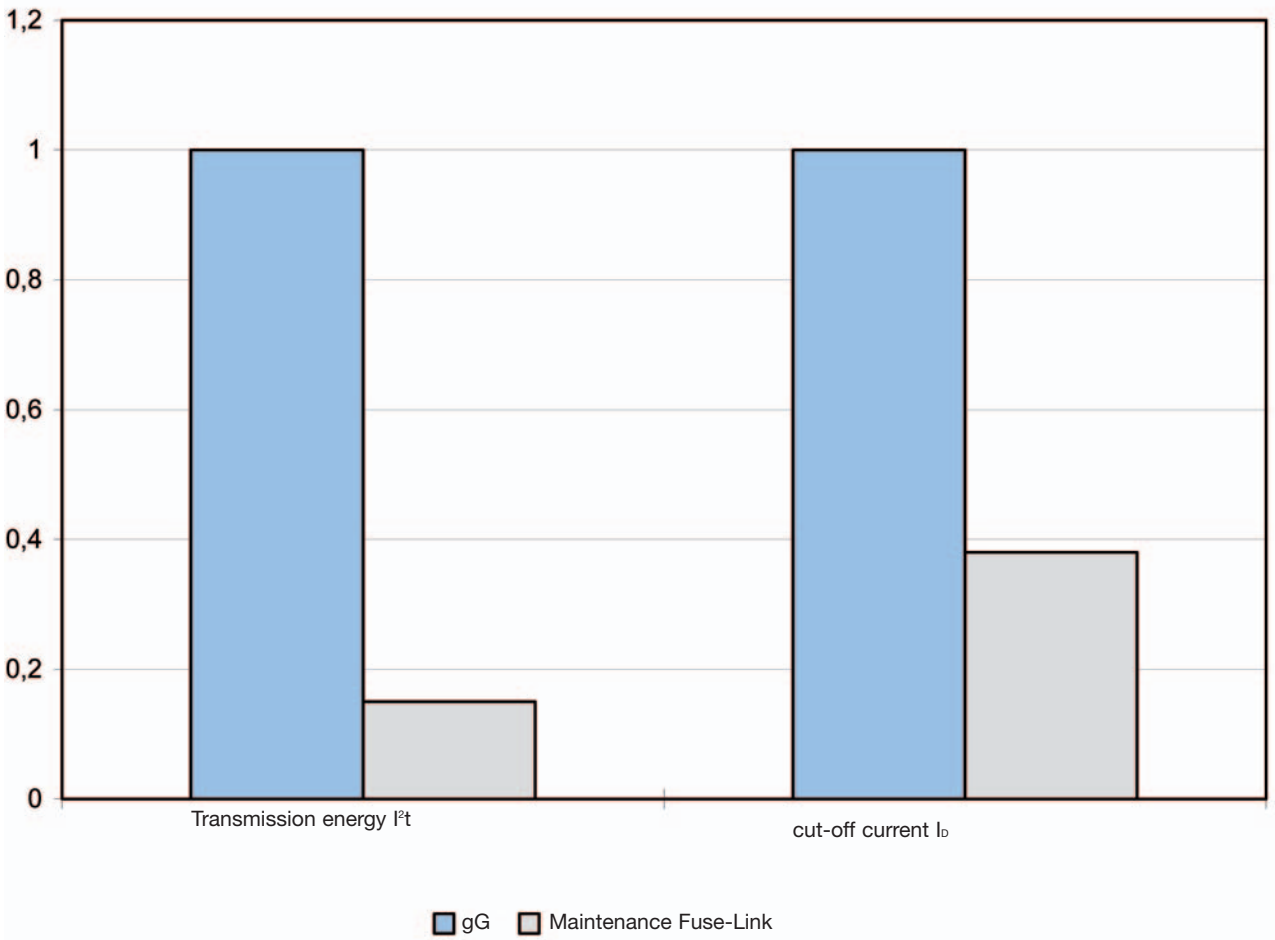

For mining applications - Pure-silver fuse element
(Resistant to aging)
Rated voltage: AC 1000 V
Utilization category: gB and aM acc. VDE 0636/22
Application: gB - Protection of mining equipment
aM - Back up protection for mining equipment
Breaking capacity: 25kA

Electrical characteristics:
1. NH Fuse-Links of utilization category gB
2. NH Fuse-Links of utilization category aM are back-up fuses for the protection for motor circuits. They protect switchgear on occurence of short circuits and together with the overcurrent protection devices a maximum safety is given to behind connected motors and switchgears. The use of pure silver fuse elements gives the Fuse-Links excellent aging resistance and reliable selectivity.

EFEN NH Fuse-Links aM are quick acting within the short circuit range, whereas no operation will be carried out on the overload range, as in this case the protection is effected by an other over-current device.

Size	a_1	a_2	b	c	e_1	e_2	f	g
1L	170	105,5	24,5	40	45	45	10	105,5
3	167,5	92,5	32	60	72	72	15	80,5

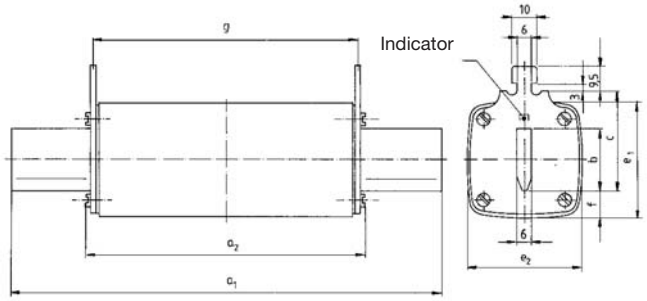

Special designs and characteristics
Rated voltage: AC 1000 and 1500 V
Utilization category: TF acc. DIN 43 620/5
Application: Rectifier-substations for electric railways
Breaking capacity: 10kA

Electrical characteristics:
Special Fuse-Links for rectifier-substations for electric railways, having pure silver fuse-elements and dual time-current characteristic i.e., time-delay characteristic in the overcurrent range and quick-acting under short circuit conditions.
The use of pure silver fuse-elements gives the NH Fuse-Links excellent aging resistance.

Version with striker:
Parallel to the fuse-link a spring-loaded striker pin is mounted. After the melting of the NH fuse-element the striker pin is releases and operates a micro-switch on the NH fuse-base.
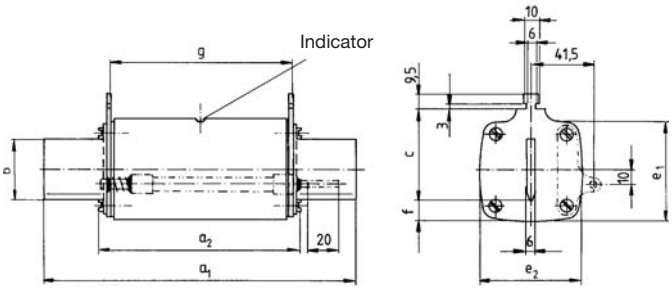
Size	a_1	a_2	b	c	e_1	e_2	f	g
3L	206	130	40	60	67	67	13,5	120